Canadian Provincial and Municipal Specifications Relating to SCMs in Concrete

Canadian Provincial and Municipal Specifications Relating to SCMs in Concrete

British Columbia Provincial Specifications	Page 3
Alberta Provincial Specifications	Page 4
City of Edmonton Specifications	Page 46
City of Calgary Specifications	Page 55
City of Winnipeg Specifications	Page 79
City of Ottawa Specifications	Page 102
Ontario Provincial Specifications	Page 104
City of Montreal Specifications	Page 147
Quebec Provincial Specifications	Page 164
Hydro Quebec Specifications	Page 169
City of Toronto Specifications	See Appendix D2
Nova Scotia Provincial Specifications	See Appendix D3

British Columbia Provincial Specifications

For BC construction specifications go to:
http://www.th.gov.bc.ca/publications/const_maint/contract_serv/standardspecs.htm

Alberta
Provincial Specifications

SPECIFICATIONS FOR BRIDGE CONSTRUCTION

SECTION 4

CAST-IN-PLACE CONCRETE

TABLE OF CONTENTS

4.1 General ..... 4 - 1

4.2 Materials for Concrete ..... 4 - 1

4.3 Storage of Materials ..... 4 - 2

4.4 Class and Composition of Concrete ..... 4 - 2
- 4.4.1 Class of Concrete ..... 4 - 2
- 4.4.2 Class HPC and Class HPC with Steel Fibres ..... 4 - 3
- 4.4.3 Temperature ..... 4 - 4
- 4.4.4 Aggregate Tests and Concrete Mix Design ..... 4 - 4
- 4.4.5 Initial Mixes, and Adjustments ..... 4 - 6

4.5 Measurement of Materials ..... 4 - 6

4.6 Mixing Concrete ..... 4 - 6
- 4.6.1 General ..... 4 - 6
- 4.6.2 Truck Mixing ..... 4 - 7
- 4.6.3 Time of Hauling ..... 4 - 7

4.7 Delivery ..... 4 - 8

4.8 Pour Schedules ..... 4 - 8

4.9 Inspection and Testing ..... 4 - 8
- 4.9.1 Strength Tests ..... 4 - 9
- 4.9.2 Sampling ..... 4 - 9
- 4.9.3 Test Cylinders ..... 4 - 9
- 4.9.4 Slump ..... 4 - 10
- 4.9.5 Air Content ..... 4 - 10
- 4.9.6 Testing Cylinders ..... 4 - 10
- 4.9.7 Failure to Meet Slump Or Air Content Specifications ..... 4 - 10

4.10 Falsework and Formwork ..... 4 - 11
4.10.1 General ..... 4 - 11
4.10.2 Design ..... 4 - 11
4.10.3 Forms for Exposed Surfaces ..... 4 - 12
4.10.4 Forms for Unexposed Surfaces ..... 4 - 12
4.10.5 Standard Details ..... 4 - 12
4.10.6 Deck Formwork ..... 4 - 13

4.11 Protection of "Weathering" Steel Girders ..... 4 - 13

4.12 Protection of Substructure Units From Rust Staining ..... 4 - 14

4.13 Removal of Falsework, Forms and Housing ..... 4 - 14

4.14 Handling and Placing Concrete ..... 4 - 15
4.14.1 General ..... 4 - 15
4.14.2 Consolidation ..... 4 - 15
4.14.3 Additional Requirements ..... 4 - 16
4.14.4 Pumping ..... 4 - 17

4.15 Placing Pile Concrete ..... 4 - 17
4.15.1 General ..... 4 - 17
4.15.2 Concrete Placed in the Dry ..... 4 - 17
4.15.3 Concrete Placed under Water ..... 4 - 17

4.16 Placing Deck, Curb and Deck Overlay Concrete ..... 4 - 17
4.16.1 General ..... 4 - 17
4.16.2 Screed Guide Rails ..... 4 - 18
4.16.3 Dry-Run ..... 4 - 18
4.16.4 Fog Misting and Wet Cure Systems ..... 4 - 19
4.16.5 Screeding Concrete ..... 4 - 19
4.16.6 Bull Floating ..... 4 - 19
4.16.7 Surface Defects and Tolerances ..... 4 - 19

4.17 Placing Approach Slab and Roof Slab Concrete ..... 4 - 20

4.18 Concreting Shear Keys and Diaphragms ..... 4 - 20

4.19 Construction Joints ..... 4 - 21
4.19.1 General ..... 4 - 21
4.19.2 Bonding ..... 4 - 21

4.20 Concreting in Cold Weather ..... 4 - 21

4.21 Depositing Concrete Under Water ..... 4 - 22

4.22 Curing Concrete ..... 4 - 23
4.22.1 General ..... 4 - 23
4.22.2 Curing Requirements for Concrete Slope Protection ..... 4 - 24
4.22.3 Curing Requirements for Class HPC ..... 4 - 24
4.22.4 Cracks in Class HPC and Class HPC with Steel Fibres ..... 4 - 25

4.23 Concrete Finishing Under Bearings ..... 4 - 25

4.24 Concrete Surface Finish ..... 4 - 25
4.24.1 General ..... 4 - 25
4.24.2 Class 1. Ordinary Surface Finish ..... 4 - 26
4.24.3 Class 2. Rubbed Finish ..... 4 - 27
4.24.4 Class 3. Bonded Concrete Surface Finish ..... 4 - 27
4.24.5 Class 4. Floated Surface Finish ..... 4 - 28
4.24.6 Class 5. Floated Surface Finish, Broomed Texture ..... 4 - 28
4.24.7 Class 6. Floated Finish, Surface Textured ..... 4 - 28

4.25 Sealer ..... 4 - 28

4.26 Concrete Strength Requirements ..... 4 - 29
4.26.1 Payment Scales ..... 4 - 29
4.26.2 Open to Traffic ..... 4 - 30
4.26.3 Coring for Compressive Strength Testing ..... 4 - 31

4.27 Measurement and Payment ..... 4 - 31

REFERENCE DRAWINGS

	Drawing No.
Standard Concrete Joints	S-1411-87
Standard Construction Joints	S-1412-99

4.1 General

This Section prescribes the quality requirements, the sampling and testing of the materials and concrete, the methods of producing and handling the constituent materials, and the batching, mixing, handling, transporting, placing and curing as outlined, and which constitute good and acceptable construction practice in structural and similar work. The Contractor shall supply all necessary materials.

Where Standards and Standard Specifications are referred to, the version current at time of tendering shall govern. Metric versions are inferred, when available and relevant.

4.2 Materials for Concrete

Concrete shall consist of Portland cement, aggregates, water and admixtures or additives which shall conform to the requirements as specified.

Cement - Normal Portland cement, Type GU, or Sulphate Resistant, Type HS, shall be supplied unless otherwise specified. Cement shall conform to the requirements of CSA Standard A 3001-03, Portland Cements.

Water - Water to be used for mixing concrete or mortar shall conform to the requirements of CSA Standard A23.1 and shall be free from injurious amounts of alkali, organic materials or deleterious substances. The Contractor shall not use water from shallow, stagnant or marshy sources.

Aggregates - Fine and coarse aggregates shall conform to the requirements of CSA Standard A23.1 and shall be stockpiled separately.

Admixtures - All approved admixtures, such as water reducing agents, air entraining agents and superplasticizers shall conform to ASTM C494 and be compatible with all other constituents. The addition of Calcium Chloride, Accelerators and Air-reducing Agents, will not be permitted, except when accepted by the Department/Consultant. Retarders or set controlling admixtures may be used for concrete specified with corrosion inhibitor.

Silica Fume - Condensed silica fume shall conform to CSA Standard A 3000-03 - Cementitious Material Compendium, Type SF, with a SiO_2 content of at least 85%, of a maximum of 10% ignition loss, and no more than 1% SO_3 content.

Air Entraining Agent - Air Entraining Agent shall be added to all concrete and shall conform to the requirements of ASTM C260.

Steel Fibres - When specified, steel fibres shall be Xorex 1, Wiremix or an acceptable equivalent. The fibres shall conform to ASTM A820/A820M-04 Type 1 or 5 and be 50 mm in length with the aluminum content no more than 0.020% by mass when tested in accordance with test method Environmental Protection Agency (EPA) 3050B.

Fly Ash - Concrete containing fly ash as a supplementary cementing material may be used in pipe piles, spread footings, solid pier shafts for river bridges, concrete containing SF and when aggregate is assessed to be potentially alkali-silica reactive. The fly ash shall not exceed 30% by mass of cementing materials, however for High Performance Concrete (HPC) it shall be in accordance with Clauses 4.4.2(e) & (g). All fly ash shall conform to the requirements of CSA-A23.5 for Type "F" or "CI" fly ash. Only approved compatible superplasticizing admixtures and air entraining agents shall be used with the fly ash. Characteristic data for fly ash is required to assure conformance to the standards.

4.3 Storage of Materials

Cement, silica fume, fly ash and steel fibres shall be stored in a suitable weather-tight building which shall protect these materials from dampness. Cement, silica fume and fly ash shall be free from lumps at all times during their use in the work. Cement, silica fume and fly ash which have been stored for a length of time resulting in the hardening or the formation of lumps shall not be used in the work. The steel fibres shall be free from balls and clumps at all times during their use in the work.

All aggregates shall be handled so as to prevent segregation and to obtain uniformity of materials. The separated aggregates, and aggregates secured from different sources, shall be piled in separate stockpiles. The site of the stockpiles shall be cleaned of all foreign materials and shall be reasonably level and firm. If the aggregates are placed directly on the ground, material shall not be removed from the stockpile within 150 mm of the ground level. This material shall remain undisturbed to avoid contaminating the aggregate being used with the ground material.

4.4 Class and Composition of Concrete

4.4.1 Class of Concrete

Class of Concrete	Minimum Specified Compressive Strength at 28 Days MPa	Size of Coarse Aggregate mm	Range of Slump mm	Total Air Content %	Max. Water/ Cementing Materials Ratio
B	25	28 to 5	50 to 70	5 - 8	0.45
Modified C	35	20 to 5	60 to 80	5 - 8	0.42
HPC	45	20 to 5	90 to 150	5 - 8	0.38
D	30	14 to 5	50 to 70	5 - 8	0.42
S	20	28 to 5	50 to 70	5 - 8	0.50
Pile	25	28 to 5	100 to 140	5 - 8	0.45

Note

- - The size of coarse aggregate shall be 28 to 5mm for Modified Class C concrete when used in mass pours such as piers and abutments.
- Class HPC concrete shall be used for all decks, deck overlays with internal reinforcement, curbs, barriers, medians, roof slabs and approach slabs. Deck overlay concrete shall be Class HPC with steel fibres when no internal reinforcement exists.
- When the thickness of deck overlay concrete is specified as 50 mm or less, the nominal maximum top size of aggregate shall be 14 mm.

4.4.2 Class HPC and Class HPC with Steel Fibres

(a) mix shall include silica fume and fly ash as supplementary cementing materials in combination with compatible air entraining, water reducing and/or superplasticizing admixtures, as required.

(b) the gradation limits for the fine aggregate shall conform to CSA A23.1, except that the amount of material finer than 160 µm shall not exceed 5%.

(c) coarse aggregate shall conform to CSA A23.1 and the maximum combination of flat and elongated particles (3:1 ratio), as determined by CSA A23.2-13A, shall not exceed 10% of the mass of coarse aggregate.

(d) minimum cement content (excluding supplementary cementing materials) shall be 335 kg/m^3

(e) sum of silica fume and fly ash by mass of cementing materials shall be 17% to 20%.

(f) silica fume by mass of cementing materials shall be 6% to 8%.

(g) fly ash by mass of cementing materials shall be 11% to 15%.

(h) slump retention of trial mix after 45 minutes shall be at least 50% of initial slump. The initial slump of the trial mix shall be measured after an elapsed time from batching of not more than 15 minutes.

(i) rapid chloride permeability shall be determined in accordance with ASTM C1202 on laboratory moist cured samples at 28 days. Rapid chloride permeability shall be less than 1000 coulombs for concrete without steel fibres or concrete containing corrosion inhibiting admixtures.

(j) an air-void spacing factor shall be determined in accordance with ASTM C457, modified point-count method at 100 times magnification. The average of all tests shall not exceed 230 µm with no single test greater than 260 µm.

(k) when Class HPC with steel fibres is specified, it shall contain 60 kg of 50 mm long Xorex 1, or an acceptable equivalent steel fibre, per cubic metre. The Contractor shall provide test results of the aluminum content in the steel fibres, for the consultants review, a minimum of two weeks prior to placing concrete at site.

(l) the temperature of the centre of the in-situ concrete shall not fall below 10°C or exceed 60°C and the temperature difference between the centre and the surface shall not exceed 20°C.

(m) trial batch(es) shall be performed at least 35 days prior to placement of concrete at site to verify that requirements pertaining to compressive strengths at 7 and 28 days, rapid chloride permeability and air void system parameters of hardened concrete have all been met. The Contractor shall also measure the shrinkage of the trial batch concrete in accordance with ASTM C157 and submit the data to the Consultant for information purposes.

4.4.3Temperature

The temperature of all classes of concrete not containing silica fume shall be between 10°C and 25°C at discharge. Temperature requirements for Class HPC and Class HPC with steel fibres shall be between 10°C and 20°C at discharge.

4.4.4Aggregate Tests and Concrete Mix Design

The Contractor shall submit the mix design he proposes for each proposed class of concrete for the Consultant's review two weeks before scheduled placing of concrete. Aggregate tests and concrete mix design shall not be required for concrete used for the construction of culvert collars or cut-off walls when culverts are 3 metre diameter or smaller.

For each mix design the following aggregate analysis shall be provided:

- "Fine and Coarse Aggregate Sieve" (CSA A23.2-2A)
- Amount of material finer than 80 µm in aggregate (CSA A23.2-5A)
- "Organic Impurities in Sands for Concrete"
- “Results of deleterious substances and physical properties of aggregates included in Table 12, CSA A23.1-04"
- “Assessment of Potential for Deleterious Alkali-Aggregate Reactivity (AAR)” (CSA A23.2-27A)
- "Petrographic Examination of Coarse Aggregate for Concrete" shall be required for Class SF HPC and Class HPC with steel fibres
- “Sources of proposed aggregate”

The analysis of the aggregates shall be current and fully represent the material to be used in production. Sampling and testing shall have been done no more than 90 days prior to concrete production. Additional analyses of more recent sampling shall be provided as required to confirm that the aggregates continue to meet requirements. A break in production of a particular class of concrete shall not constitute the need for additional testing when the Contractor provides conclusive evidence that the material initially tested, is still representative.

If the fine aggregate consists of a blend from more than one source, the "Fine Aggregate Sieve" analysis shall show the gradation of the blended fine aggregates. Similarly in the case of blended coarse aggregates, the "Coarse Aggregate Sieve" analysis shall indicate the gradation of the blended coarse aggregates.

Fine aggregate, tested in accordance with CSA Test Method A23.2-7A, "Organic Impurities in Sands for Concrete", shall produce a colour not darker than the Standard colour (Organic Plate Number 3). Aggregate producing a colour darker than the Standard colour will be rejected in the absence of a satisfactory record of performance of a similar class of concrete (minimum 30 tests over the last 12 months); provisions 4.2.3.3.3.2 (a) & (b) of CSA Standard CAN3-A23.1-04 shall not apply.

The potential for deleterious alkali-aggregate reactivity shall be assessed in accordance with CSA A23.2-27A. This assessment shall include the risk level associated with structure size and environment, the level of prevention related to service life requirements and the determination of the appropriate preventative measures. Current (less than 18 months old) test data evaluating the potential alkali-silica reactivity of aggregates tested in accordance with CSA A23.2-14A or CSA A23.2-25A is required. In the absence of current test data and outside of areas of known highly reactive aggregate, the aggregate shall be presumed to be moderately reactive.

Petrographic analysis shall be performed by an experienced qualified petrographer of a CSA certified laboratory in accordance with CSA A 23.2-15A. The (weighted) petrographic number shall not exceed 130, and the ironstone content shall not exceed 0.8%. The results shall be certified by a Professional Geologist, or Geological Engineer, and indicate that the aggregate is suitable for the intended use.

Concrete mixes that will be placed by concrete pump shall be designed for pumping.

The sampling and testing of aggregates, and the concrete mix design shall be completed by an independent CSA certified and qualified concrete testing laboratory which shall have a permit to practice in the Province of Alberta. Concrete mix designs including sampling and testing of aggregates may be completed and stamped by a Professional Engineer registered in the Province of Alberta, however for these situations, the mix design shall be reviewed and stamped by an independent CSA certified and qualified concrete testing laboratory having a permit to practice in the Province of Alberta. For either case, the testing laboratory shall provide an engineering opinion that concrete aggregate and mix designs are suitable for the intended use and are expected to perform to specified standards.

For Class HPC and Class HPC with steel fibres, the Contractor shall produce evidence satisfactory to the Consultant that the proportions selected will produce concrete of the quality specified. This shall include the preparation of satisfactory trial mixes, before the concrete is used. The trial mix shall be a minimum of 3 m^3 or 50% of the rated mixer capacity (whichever is greater) and simulate the anticipated placing procedures at site. In preparing the trial mixes the workability and slump retention characteristics shall be assessed at 30, 45 and 60 minute intervals. In addition the concrete from the trial mixes shall also satisfy the rapid chloride permeability requirement in accordance with Section 4.4.2(i).

4.4.5 Initial Mixes, and Adjustments

For all classes of concrete other than HPC and HPC with steel fibres, in cases of initial mixing operations or changes in source of water or aggregates, the mix adopted shall be designed for an excess compressive strength of 10% above the specified 28 day nominal compressive strength. After the mix has been adequately proven as to strength and performance, adjustment may be undertaken, but only with the acceptance of the Consultant. If, during the progress of the work, the mix design is found to be unsatisfactory for any reason including poor workability, the Contractor shall make the necessary adjustments. Notwithstanding the Consultant's review of the design mix, it remains the Contractor's responsibility that the concrete meets all the requirements of this Specification.

4.5 Measurement of Materials

Coarse and fine aggregate materials shall be separated and measured separately by weighing, except as otherwise specified or where other methods are specifically authorized by the Consultant. The apparatus provided for weighing the aggregates and cement shall be suitably designed and constructed for this purpose. Each size of aggregate, and the cement, shall be weighed separately. The accuracy of all weighing devices shall be such that successive quantities can be measured to within one percent of the desired amount. The mixing water shall be measured by volume or by weight. The water measuring device shall be capable of control accurate to plus or minus 1/2 % of the design quantity. All measuring devices shall be subject to acceptance. Unless otherwise accepted, air entraining agent and other admixtures shall be added to the mix in a water-diluted solution; the dilution of the solution shall be accepted by the Consultant. For mix adjustments at the site, the Contractor shall maintain facilities to control the amount of superplasticizer and air entrainment so that the required tolerances can be met.

4.6 Mixing Concrete

Mobile continuous mixers or other such concrete supply equipment will not be accepted for use.

4.6.1 General

All concrete shall be mixed thoroughly until it is uniform in appearance, with all ingredients uniformly distributed. In no case shall the mixing time per batch be less than one minute for mixers of one cubic metre capacity or less. The "Batch" is considered as the quantity of concrete inside the mixer. This figure shall be increased by 15 seconds for each additional half cubic metre capacity or part thereof. The mixing period shall be measured from the time all materials are in the mixer drum.

The Contractor shall in no case load the mixer above its rated capacity. The Contractor shall maintain the mixer in good condition. Inner surfaces of the mixer shall be kept free of hardened concrete and mortar. Mixer blades which are bent or worn down so as to affect the mixing efficiency shall be renewed. Any mixer leaking mortar or causing waste of materials through faulty charging shall be taken out of service until repaired. The Contractor shall, at all times, operate the mixer at the speed recommended by the Manufacturer and shall, if requested, supply the Manufacturer's certification of the mixing capacity of the machine in use.

The mixer shall be fitted with an accurate and dependable means for measuring the water added, which is not affected by variation in pressure in the water supply line. All joints, valves and other parts shall be maintained so that there is no leakage of water into the mixer drum. Failure of the Contractor to have an accurately working and dependable water gauge on a mixer shall be cause for the Consultant to prohibit the mixer to be used.

Water shall be released first and continue to flow while the solid materials are entering the mixer. The water discharge pipe shall be so arranged and be of such size that the flow into the mixer is completed within the first quarter of the mixing time, and the water is delivered well within the mixer where it will be quickly mixed with the entire batch.

Air entraining agents and admixtures shall be placed in the mixer after the initial water is in the mixer drum but before the remaining materials are added. Superplasticizer shall be added after initial mixing and as per the manufacturer's recommendation.

4.6.2 Truck Mixing

Truck mixers, unless otherwise authorized by the Consultant, shall be of the revolving drum type, watertight, and so constructed that the concrete can be mixed to ensure uniform distribution of materials throughout the mass. All materials for the concrete shall be accurately measured in accordance with Section 4.5, and charged concurrently at the proportions which satisfy the accepted mix design into the drum at the production plant. Increases in water-cement ratio will not be permitted.

The maximum size of batch in truck mixers shall not exceed the maximum rated capacity of the mixer as stated by the manufacturer and stamped in metal on the mixer. Truck mixing shall commence immediately upon introduction of ingredients into the drum and be continued for at least 50 revolutions with the mixing rate being in accordance with the manufacturer's recommended rate, and shall be such as to thoroughly mix the concrete.

When adjustment to the mix by adding water, air entraining agent or superplasticizer at the site is authorized by the Consultant, the mixer shall be run for a minimum of 20 additional revolutions to ensure homogeneity of the concrete before discharge. Discharge chutes shall be kept clean and free from hardened concrete and shall be wetted down prior to use.

4.6.3 Time of Hauling

The maximum time allowed for all classes of concrete other than Class HPC and Class HPC with steel fibres including delivery to the site of the work and discharge shall not exceed 90 minutes after batching. Batching of all classes of concrete is considered to occur when any of the mix ingredients are introduced into the truck mixer drum, regardless of whether or not the drum is revolved. For Class HPC and Class HPC with steel fibres this requirement is reduced to 70 minutes. In hot weather, or under conditions contributing to quick setting of the concrete, these times may be reduced as determined by the Consultant. Deviations from these requirements will be addressed in the Special Provisions.

4.7 Delivery

The Concrete supplier shall have sufficient plant capacity and satisfactory transporting equipment to ensure continuous delivery at the rate required. The rate of delivery of concrete during concreting operations shall be such that the development of cold joints will be precluded not occur. The methods of delivering and handling the concrete shall facilitate placing with a minimum of rehandling, and without damage to the structure or the concrete.

4.8 Pour Schedules

The Contractor shall outline to the Consultant the proposed pour schedule for any particular pour. If in the opinion of the Consultant the amount of pour is deemed larger than can be poured with the facilities outlined the Contractor shall either:

(a) Limit the amount to be poured at any time (using adequate construction joints), or

(b) Augment his facilities in order to complete the proposed pour, or

(c) In the case of continuous pouring provide additional crews and have adequate lighting to provide for proper placing, finishing and inspecting.

4.9 Inspection and Testing

The Consultant shall be afforded full facilities for the random quality assurance inspection and testing that may be carried out relative to the concrete itself and/or the constituent materials. This includes at the worksite and any plant used for the manufacture of concrete wherever this may be situated. The facilities shall be adequate in the opinion of the Consultant to permit proper sampling of concrete, making of test cylinders and testing slump and air content. The proper storage of all site cast concrete cylinders in accordance with the relevant specifications is the responsibility of the Contractor and shall be provided prior to any concrete pour.

The results of the quality assurance testing carried out by the Consultant will serve to monitor and review the quality control program of the Contractor.

The Contractor shall utilize ACI or CSA certified testers with extensive related experience to test at site, the air content, slump, and temperature of each batch; results of all such tests shall be provided to the Consultant. Additional tests will be required if the results are borderline or widely variable. In case of an unacceptable result, one check test will be permitted. The certified workers testers shall also cast the test cylinders as specified in 4.9.3 “Test Cylinders”.

4.9.1 Strength Tests

A "Strength Test" shall consist of the compression tests of four standard test specimens, sampled, made, cured, and tested in accordance with CSA Standard Specifications as referenced with modifications as indicated. One cylinder shall be tested at seven days. The 28 day test result shall be the average of the strengths of the remaining three specimens, except that if any specimen in a test showing distinct evidence of improper sampling, molding or testing, shall be discarded and the remaining strengths averaged. Additional cylinders may be cast, at the discretion of the Consultant or Contractor.

For Class HPC and Class HPC with steel fibres, the Contractor shall take a strength test to represent each approximate 10 m^3 portion of the concrete pour. For all other concrete, the Contractor shall take a strength test to represent each bridge element or portion of the element (ie. abutment seat, abutment backwall, pier footing, pier cap), except on larger pours a strength test will be taken to represent each approximately 30 m^3 portion of the concrete pour. Such tests shall be taken from representative batches as determined by the Consultant.

4.9.2 Sampling

Sampling of concrete shall be carried out in accordance with CSA Standard A23.2-1C. When a concrete pump is used to place concrete, sampling shall be at the end of the discharge hose.

4.9.3 Test Cylinders

Making and curing concrete test cylinders shall be carried out in accordance with CSA Standard A23.2-3C, except that the time for cylinders to reach the testing laboratory shall be between 20 and 48 hours. The test cylinders shall be cast by the Contractor in standard CSA approved moulds. The Contractor shall provide properly designed temperature-controlled storage boxes for test cylinders, as specified in Section 5.3.2.1 of CSA Standard A23.2-3C, for a period of at least 24 hours, and further protection, as required, from adverse weather and mishandling until removed from the site. The Contractor shall provide a max-min thermometer for each storage box and record site curing temperatures for all test cylinders. Storage in a portable building which will be used by Contractor's personnel or the Consultant during the first 24 hour storage period will not be permitted. Storage facilities shall be provided, installed, and accepted before any concrete is placed.

The Contractor shall be responsible to deliver the test cylinders to an independent CSA certified testing laboratory. Handling and transporting of the cylinders shall be in accordance with CSA Standard 23.2-3C. No extra laboratory curing time will be allowed for cylinders that are delivered late to the laboratory. A copy of the test results shall be forwarded to the Consultant within 2 days of the break date.

If the test cylinders exhibit frozen conditions, or are otherwise mishandled resulting in unreliable strength test results, the Department or Consultant may reject these portions of the Work, unless core-testing, at the Contractor's expense confirms the in-situ strength of the concrete.

The Contractor shall be responsible for all costs for concrete testing, including but not limited to making test cylinders, transporting cylinders to an independent certified testing laboratory of his choice, storage, curing, breaking, and providing written reports of the concrete test results to the Consultant.

The Contractor shall also be responsible for costs for supplying CSA approved moulds, curing and delivering test cylinders cast by the Consultant, for quality assurance purposes to the same independent certified testing laboratory that he selects. Quality assurance testing will be carried out by the Consultant and the costs for breaking and provision of concrete test cylinder reports will be paid for by the Department.

4.9.4 Slump

Slump tests shall be made at the discretion of the Consultant in accordance with CSA Standard A23.2-5C.

4.9.5 Air Content

Air content tests shall be made in accordance with CSA Standard A23.2- 4C.

4.9.6 Testing Cylinders

Test cylinders will be tested in compression in accordance with CSA Standard A23.2-9C by an independent CSA certified engineering laboratory engaged by the Contractor.

4.9.7 Failure to Meet Slump Or Air Content Specifications

In the event that slump and/or air content are outside the specified tolerance range, as determined by the Contractor's or the Consultant's testing, the Consultant may, accept adjustments of the deficient condition as an alternate to rejection provided adjustments are made within the maximum time allowed as specified in 4.6.3. Concrete that does not meet the specifications will be rejected after the maximum time is exceeded.

For Class HPC and Class HPC with steel fibres the Contractor will be allowed to adjust only the quantities of superplasticizer and air entraining agent. Addition of water at site to the batch will only be permitted subject to an alternate batching procedure accepted by the Consultant and the Department. In no case shall accepted batch adjustment relieve the Contractor of his responsibility for the eventual durability, strength, and acceptability of the concrete concerned. The Department or Consultant reserves the right to reject any batch in the event of confirmed unacceptability, and to require immediate removal of any concrete from this batch which may have already been placed in the structure.

4.10 Falsework and Formwork

4.10.1 General

Detailed falsework and formwork drawings shall be supplied to the Consultant for review and examination as to concept only. The drawings shall be submitted three weeks before construction of the work begins. The drawings shall bear the Seal of a Professional Engineer registered in Alberta, who shall assume full responsibility to ensure that his design is being followed in construction of the falsework and formwork. Alberta Safety, and compliance with the Occupational Health and Safety Act and Regulations thereunder, shall be integral parts of his design. All falsework and formwork shall be fabricated in accordance with the drawings.

4.10.2 Design

For the design of falsework and formwork, the density of fresh concrete shall be assumed to be 2400 kg/m^3. All forms shall be of wood, metal or other acceptable materials, and shall be designed and built mortar-tight and of sufficient rigidity to prevent distortion due to the pressure of vibrated concrete and other loads incidental to the construction operation. The forms shall be substantial and unyielding, and shall be designed so that finished concrete will conform to the design dimensions and contours. The shape, strength, rigidity, watertightness and surface smoothness of re-used forms shall be maintained at all times. Any warped or bulged formwork must be repaired or replaced before being used. Forms which are unsatisfactory in any respect shall not be used.

All falsework shall be designed and constructed to provide the necessary rigidity and to support the loads without appreciable settlement or deformation. Falsework which cannot be founded on a satisfactory footing shall be supported on piling which shall be spaced, driven and removed in a manner acceptable to the Consultant.

For timber formwork, drawings shall specify the type and grade of lumber and show the size and spacing of all members. The formwork drawings shall also show the type, size and spacing of all ties or other hardware, and the type, size and spacing of all bracing.

When forms appear to be unsatisfactory in the opinion of the Consultant, either before or during the placing of concrete, the Consultant will order the work stopped until the defects have been corrected.

For narrow walls and columns, where the bottom of the form is inaccessible, removable panels shall be provided in the bottom form panel to enable cleaning out of extraneous material immediately before placing the concrete.

4.10.3 Forms for Exposed Surfaces

Forms for exposed surfaces which require a Class 1 "Ordinary Surface Finish" shall be made of good quality plywood, or an acceptable equivalent, of uniform thickness, with or without a form liner. Forms for exposed surfaces requiring a Class 2 "Rubbed Finish" or Class 3 "Bonded Concrete Surface Finish" shall be all new material, made of "Coated Formply", consisting of Douglas Fir substrate with resin-impregnated paper overlay and factory treated chemically active release agent, "ULTRAFORM", or "POURFORM 107", are acceptable formwork panels, however other forming panels will be considered if approved equal. All form material for exposed surfaces shall be full-sized sheets, as practical. The re-use of any forms must have the acceptance of the Consultant.

All forms for exposed surfaces shall be mortar-tight, filleted at all sharp corners, and given a bevel or draft in the case of all projections. At the top edges of exposed surfaces, the chamfers are to be formed by chamfer strips.

The minimum acceptable forming for all exposed concrete where the pour height is 1.5 m or less shall have 18 mm approved plywood, supported at 300 mm maximum on centres. Where the pour height is greater than 1.5 m the minimum acceptable forming for all exposed concrete shall have 18 mm approved plywood, "Coated Formply", supported at 200 mm maximum on centres. The support spacings specified here assume the use of new material. Closer spacings may be required in case of re-used material. Strong-backs or walers placed perpendicularly to the supports shall be employed to ensure straightness of the form.

Metal bolts or anchorages within the forms shall be so constructed as to permit their removal to a depth of at least 20 mm from the concrete surface. Break-back type form ties shall have all spacing washers removed and the tie shall be broken back a distance of at least 20 mm from the concrete surface. All fittings for metal ties shall be of such design that, upon their removal, the cavities which are left will be of the smallest possible size. Torch cutting of steel hangers and ties will not be permitted. Formwork hangers for exterior surfaces of decks and curbs shall be an acceptable break-back type with surface cone, or removable threaded type. Cavities shall be filled with cement mortar and the surface left sound, smooth, even and uniform in color.

4.10.4 Forms for Unexposed Surfaces

The minimum acceptable forming for unexposed concrete shall have 15 mm plywood supported at 400 mm maximum on centres.

4.10.5 Standard Details

Refer to Standard Drawing S-1411 "Standard Concrete Joints" and Standard Drawing S-1412 "Standard Construction Joints," included with these Specifications, for details of joints.

4.10.6 Deck Formwork

Unless otherwise noted, diaphragms and girders will be designed for construction loads during deck concrete pour in accordance with CSA-S6-00 Clause 3.16, and the loads assumed for such design shall be shown on contract drawings. Where construction loads or loading conditions vary from those shown, the Contractor shall be responsible for maintaining girder stability until the deck concrete has gained sufficient strength. Where required, deck formwork design shall include any additional bracing system to those shown on the contract drawings. Care shall be taken in the design and installation of support brackets to avoid damage to girder flanges and webs. Where such brackets bear against girder webs, the girder webs shall be protected by timber or neoprene softeners. Effects of concentrated loads on thin webs shall be checked, and where necessary, sufficient means shall be provided to distribute or carry such concentrated loads to the supporting flanges or stiffeners.

Formwork for decks, curbs, sidewalks, and parapets shall be fabricated so that the lines and grades shown on the drawings are achieved. Girders will be erected to normally accepted industry standards of tolerance; it shall be necessary to adjust the formwork to compensate for variances in girder dimensions, positioning, alignment, and sweep.

Prior to commencing deck formwork, the Contractor shall profile all the girders and determine the deck concrete thickness values required to achieve the specified gradeline. This information shall be provided to the Consultant prior to commencing any deck formwork.

In the event that actual girder camber values vary significantly from the estimated values indicated on the drawings, the Consultant will require the Contractor to raise or lower the gradeline accordingly.

4.11 Protection of "Weathering" Steel Girders

Where steel girders are fabricated of "weathering" steel, it is essential that the uniformity of rust formation is not adversely affected by the Contractor's operation.

The Contractor shall exercise utmost care and provide the necessary protection to prevent marking or staining of the girders. All joints between deck formwork and steel members (including interior girders, and diaphragms) shall be sealed to prevent leakage of cement paste or concrete. Caulking, duct tape, ethafoam, or any other suitable means or material, shall be used to achieve the seal.

Should foreign material spill onto the girders despite the protection provided, the Contractor shall clean off, wash, and sandblast the contaminated areas, to the satisfaction of the Consultant. Additionally, should the exterior face of an exterior girder become stained or marked, the entire exterior face of the girder line shall be lightly sandblasted and "weathered" so that uniformity of girder color, in the opinion of the Consultant, is achieved.

"Weathering" shall be achieved by repeatedly fogging the exterior girder faces with clean water and allowing them to dry. Fogging should leave the girders wet but not "running wet", and should be repeated when the girders are completely dry.

The cost of sealing and stain-prevention shall be included in the unit price bid for the deck concrete; no separate or additional payment will be made for the cost of protecting the girders, nor for any cleaning, sandblasting, or "weathering" made necessary by the Contractor's operation.

4.12 Protection of Substructure Units from Rust Staining

The substructure will be subject to staining, during the period from erection to casting of the concrete deck. The Contractor shall be responsible either to take suitable measures to coat or cover the piers and abutments before erection, or to adequately remove all staining so that the required concrete finishes may be applied with no trace of stain remaining. Final acceptance of pier finish will not be given until after all deck and curb concrete is in place.

This work will be considered incidental to the application of the specified concrete surface finish, and no separate payment will be made.

4.13 Removal of Falsework, Forms and Housing

Forms and their supports shall not be removed without the acceptance of the Consultant. In determining the time for the removal of falsework, forms and housing, and the discontinuance of heating, consideration shall be given to the location and character of the structure, the weather and other conditions influencing the curing of the concrete, and the materials used in the mix.

The following guide for removal of forms and supports may be used if the temperature of the concrete is maintained at no less than 15°C:

Portion of Work		Age or Minimum Strength
Arches and girders	-	14 days (or 80% of 28-day strength)
Pier caps and beams	-	5 days (or 50% of 28-day strength)
Columns	-	1 to 3 days
Decks & Slabs	-	5 days (or 50% of 28-day strength)
Vertical faces of supported elements	-	12 to 24 hours
Walls over 3 m high	-	2 days

Supports and forms may be removed from arches, girders, deck, pier caps and beams earlier than the minimum curing periods specified above, with the Consultant's acceptance. In seeking acceptance the Contractor shall, at his own expense, furnish evidence satisfactory to the Department and Consultant that the strength of the concrete in place has attained the above noted percentage of the specified 28-day strength before removal.

Supports shall be removed in such a manner as to permit the concrete to uniformly and gradually take the stresses due to its own weight.

All formwork must be removed from the completed structure.

4.14 Handling and Placing Concrete

4.14.1 General

The Contractor shall give the Consultant a minimum of two days advance notice of a concrete pour date or a change to a pour date.

All equipment proposed for use in mixing, conveying, placing and compacting the concrete shall be reviewed and accepted by the Consultant prior to its use. All the necessary equipment for any particular pour shall be on site and proven to be in working condition before the pour commences, with backup equipment on site as determined by the Consultant. The equipment shall be well maintained, suitable in kind and adequate in capacity for the work.

In preparation for the placing of concrete, all sawdust, chips and other construction debris and extraneous matter shall be removed from the interior of forms. Struts, stays, and braces, serving temporarily to hold the forms in correct shape and alignment, pending the placing of concrete at their locations, shall be removed when the concrete placing has reached an elevation rendering their service unnecessary. These temporary members shall be entirely removed from the forms and not buried in the concrete.

Concrete shall be placed so as to avoid segregation of the materials and the displacement of the reinforcement. When placing operations would involve free drop of concrete by more than 1 m, it shall be deposited through metal or other acceptable pipes.

Concrete for the structure shall be deposited in the forms in the order indicated on the drawings, and each portion placed between construction joints shall be placed in one continuous operation. No other order of pouring shall be done unless otherwise accepted by the Consultant.

Concrete placing operations shall not work off, or transport concrete directly over, concrete already placed, when this concrete is less than 48 hours old, no matter what system of runways, supports or protection is used on the surface of the concrete already placed, if it is subjected thereby to live or dead loads. Concrete more than 48 hours old but of less than the specified 28-day strength shall not be loaded without the acceptance of the Consultant.

4.14.2 Consolidation

Concrete, during and immediately after depositing, shall be thoroughly consolidated. The consolidation shall be done by mechanical vibration subject to the following provisions:

- The vibration shall be internal unless special authorization of other methods is given by the Consultant, or the Consultant requests the use of other methods.

- Vibrators shall be of a type and design acceptable to the Consultant. They shall be capable of transmitting vibrations to the concrete at frequencies of not less than 4500 impulses per minute.

- The intensity of vibration shall be such as to visibly affect a mass of concrete of 25 mm slump over a radius of at least 0.5 m.

- The Contractor shall provide a sufficient number of vibrators to properly compact each batch immediately after it is placed in the forms.

- Vibrator operators shall be suitably instructed in the use of vibrators, and the importance of adequate and thorough vibration of the concrete.

- Vibrators shall be manipulated so as to thoroughly work the concrete around the reinforcement and imbedded fixtures and into the corners and angles of the forms. Vibration shall be applied at the point of deposit and in the area of freshly deposited concrete. The vibrators shall be inserted vertically and withdrawn out of the concrete slowly. The vibration shall be of sufficient duration and intensity to thoroughly compact the concrete, but shall not be continued so as to cause segregation. Vibration shall not be continued at any point to the extent that localized areas of grout are formed. Application of vibrators shall be at points uniformly spaced and not farther apart than the radius over which the vibration is visibly effective.

- Vibration shall not be applied directly or through the reinforcement of sections or layers of concrete which have hardened to the degree that the concrete ceases to be plastic under vibration. It shall not be used to make concrete flow in the forms over distances so great as to cause segregation, and vibrators shall not be used to transport concrete in the forms.

- Vibration shall be supplemented by such spading as is necessary to ensure smooth surfaces and dense concrete along form surfaces and in corners and locations impossible to reach with the vibrators.

4.14.3 Additional Requirements

When concrete placing is discontinued, for whatever reason, all accumulations of mortar splashed on the reinforcing steel and the form surfaces shall be removed. Dried mortar chips and dust shall not be puddled into the unset concrete. If the accumulations are not removed prior to the concrete becoming set, care shall be exercised not to injure or break the concrete-steel bond at and near the surface of the concrete, while cleaning the reinforcing steel.

Concrete shall be placed while fresh and before it has taken its initial set. Retempering of partially hardened concrete with additional water will not be permitted. No concrete shall be used which does not reach its final position in the forms within the time stipulated under 4.6.3 "Time of Hauling" above.

After initial set of the concrete the forms shall not be jarred and no strain shall be placed on the ends of reinforcing bars which project.

Concrete which would be adversely affected by the presence of freestanding water shall be protected to prevent its occurrence, and the Contractor shall take whatever steps may be necessary to prevent free water build-up in the event of unexpected rainfall or similar occurrences for the first 24 hours.

Water used to keep equipment clean during the pour, or to clean equipment at the end of the pour, shall be discharged clear of the structure.

4.14.4 Pumping

The operation of the pump shall produce a continuous flow of concrete without air pockets. The equipment shall be so arranged that no vibrations result which might damage freshly placed concrete. When pumping is completed, the concrete remaining in the pipeline, if it is to be used, shall be ejected in such a manner that there will be no contamination of the concrete or separation of the ingredients.

4.15 Placing Pile Concrete

4.15.1 General

The Contractor shall make every attempt to obtain a “Dry” pile hole prior to placing pile concrete. In the event that all reasonable attempts at obtaining a dry hole fail, the Consultant may permit the placement of pile concrete under water.

4.15.2 Concrete Placed in the Dry

Pile concrete shall be placed by means of a hopper equipped with a centre pipe drop tube. The pipe drop tube shall be a minimum of 200 mm in diameter and 2 m long. Concrete may be placed free fall, providing the fall is vertically down the centre of the casing or drilled hole and there are no transverse ties or spacers. Pile concrete shall have a slump range of 100 - 140 mm at time of discharge. Concrete in the upper 3 m of the piles shall be consolidated by the use of an acceptable concrete vibrator.

4.15.3 Concrete Placed under Water

Placement of pile concrete under water shall be in accordance with Section 4.21 of this Specification.

4.16 Placing Deck, Curb and Deck Overlay Concrete

4.16.1 General

All deck, curb and deck overlay concrete shall be Class HPC, or Class HPC with Steel Fibres, as specified. Concrete placing will not be permitted when the air temperature is below +5°C or above 22°C, nor in the event of rain or excessive wind or dust, nor when there are other conditions judged by the Consultant to be detrimental to the concrete. Deck concrete placing shall normally be between the hours of 6:00 pm and 10:00 am except with specific acceptance of the Department and Consultant. Night pours shall require proper lighting as reviewed and accepted by the Consultant. The temperature of the concrete during discharge shall be between 10°C and 20°C unless reviewed and accepted otherwise by the Consultant. The temperature of the mix shall be maintained below the 20°C maximum temperature by the inclusion of ice to the mix which shall not alter the design water-cement ratio. Immediately prior to placing concrete, the substrates shall be thoroughly wetted down with clean water.

All deck concrete and deck overlay concrete shall be consolidated in accordance with Section 4.14.2 even when vibratory drum type finishing machines are used.

Placing/Finishing Machines

For all deck concrete and deck overlay concrete, screeding shall be by concrete placing/finishing machines as follows or acceptable equivalents:

- Bidwell Model RF200 or Model 364
- Gomaco Model C450

The Contractor shall provide two work bridges, separate from the placing/finishing machine, of adequate length to completely span the width of the pour. The work bridges will facilitate the operations of concrete finishing and placing of wet burlap, and shall also be made available to the Consultant for straight-edge checking. The work bridges shall be supported essentially parallel to the concrete surface, between 250 mm and 600 mm above the concrete surface, and shall be at least 800 mm wide to permit diverse uses concurrently, and be rigid enough that dynamic deflections are insignificant.

4.16.2 Screed Guide Rails

Acceptable steel screed guide rails shall be installed to suit the profile of the required surface and to ensure a smooth and continuous surface from end to end of the bridge. Guide rails must be located outside of the finished surface of the pour for overlay concrete and also for deck concrete, unless specified otherwise in the Special Provisions. All rails and supports shall be removed with minimum disturbance to the concrete.

4.16.3 Dry-Run

The finishing machine shall be set-up to match the skew angle of the bridge, when the skew angle exceeds 15°. For skewed bridge structures on vertical curves this requirement may be altered to suit actual site conditions.

The finishing machine and guide rails shall be adjusted so that the height of the screed will finish the concrete to the design gradeline and crown. To confirm the adjustment of the machine and guiderails, the screed shall be dry-run prior to the pour and clearance measurements taken at each of the girder tenth points, and provided to the Consultant for review and acceptance. Re-setting of the machine and/or screed rails shall be done as necessary, to obtain an acceptable dry-run. Adjustments to the machine or screed rails will not be permitted after an acceptable dry-run has been completed.

Where screed rails are supported on cantilevered formwork that could deflect under the weight of the fresh concrete and the deck finishing machine, the Contractor shall pre-load a section of the cantilevered formwork on each side of the bridge to determine deflections that will occur during concrete placement. The formwork, machine and/or screed rails shall be adjusted to compensate for the expected formwork deflection.

4.16.4 Fog Misting and Wet Cure Systems

Details of the fog misting and wet cure systems shall be provided to the Consultant for review and acceptance three weeks prior to the scheduled pour date. Details shall include information with regards to the type and description of equipment and materials being used and work method/techniques employed to satisfactorily carry out the work.

4.16.5 Screeding Concrete

The screed shall be moved slowly and at a uniform rate. In general, the direction of pouring should be from the low end of the bridge to the high end. A roll of concrete shall be maintained along the entire front of the screed at all times to ensure the filling and consolidation of the surface concrete. The contractor shall also ensure that the required concrete thickness is being placed by randomly probing the concrete behind the finishing machine.

Screeding shall be completed in no more than two passes. The screed shall not be allowed to run except when screeding is actually in progress. The screeded surface shall not be walked on or otherwise damaged.

4.16.6 Bull Floating

The concrete surface produced behind the finishing machine shall be magnesium floated the minimum amount necessary to ensure that the surface is free from open texturing, plucked aggregate and local projections or depressions.

4.16.7 Surface Defects and Tolerances

The finished surface of the concrete shall conform to the design gradeline profiles as indicated on the drawings and/or as determined on site.

The surface shall be free from open texturing, plucked aggregate and local projections.

Except across the crown, the surface shall be such that when tested with a 3 m long straight edge placed anywhere in any direction on the surface, there shall not be a gap greater than 3 mm between the bottom of the straight edge and the surface of the deck anywhere below the straight edge.

The surface shall be checked by the Contractor, as described above, immediately after final bull floating and before texturing.

The surface shall again be checked by the Contractor at the end of the curing period in the same manner and to the same tolerance.

Areas that do not meet the required surface accuracy shall be clearly marked out and the Contractor shall, at his own expense:

(a) Grind down any areas higher than 3 mm but not higher than 10 mm above the correct surface.

(b) Correct any areas lower than 3 mm but not lower than 10 mm below the correct surface, by grinding down the adjacent high areas.

(c) When the deviation exceeds 10 mm from the correct surface, the deck slab shall be removed and replaced in accordance with Section 20.3.2 “Partial Depth Repair”, resulting in a product that is in no way inferior to the adjacent undisturbed slab. Replaced areas shall be at the Contractor's expense.

Grinding shall be carried out by an approved machine, of a type and capacity suitable for the total area of grinding involved, until the surface meets the specified requirements.

All corrective work will require the Contractor to submit a proposal for review and acceptance by the Department and Consultant, prior to commencement of any work.

If the surface is damaged in any way by construction operations, or if the deck shows signs of distress or scaling prior to the final acceptance of the deck, it shall be repaired or replaced by the Contractor at his own expense.

4.17 Placing Approach Slab and Roof Slab Concrete

After properly placing and consolidating the concrete, it shall be struck off and screeded to conform to the required cross-section and grade. Concrete placing shall be carried out in a manner such that the newly deposited concrete is continually placed against fresh concrete across the entire face of the pour and the formation of cold joints is avoided. A slight excess of concrete shall be kept in front of the screed at all times.

The surface shall then be floated longitudinally, transversely or in both directions as necessary to ensure that the surface is free from open texturing, plucked aggregate, and local projections or depressions. The surface shall be such that it does not vary more than 5 mm from the required lines, under a 3 m straightedge.

4.18 Concreting Shear Keys and Diaphragms

Precast concrete girders will be erected to normally accepted industry standards for tolerance. Forming of shear keys and diaphragms shall be designed to accommodate variations in girder dimensions, positioning, alignment, camber and sweep. Before concreting, the girder keyways must be saturated with water for a period not less than 30 minutes, and must be coated with an approved bonding agent immediately ahead of the concrete. Concrete placed in the keyways shall be adequately vibrated, and trowelled smooth and flush to the girders. Immediately after trowelling, wet burlap or white filter fabric shall be placed on the shear keys and kept continuously wet for the next 72 hours.

4.19 Construction Joints

4.19.1 General

Construction joints shall be made only where indicated on the drawings or shown in the pouring schedule unless otherwise reviewed and accepted by the Consultant.

If not detailed on the drawings, or in the case of emergency, construction joints shall be placed as determined by the Consultant and according to the standard drawing. Shear keys or inclined reinforcement shall be used where necessary to transmit shear, or to bond the two sections together. Construction joints should be located to allow a minimum of 50 mm minimum concrete cover on reinforcing steel running parallel to the joint. Refer to Standard Drawing S-1412 "Standard Construction Joints" included with these Specifications.

4.19.2 Bonding

Before depositing new concrete on or against concrete which has hardened, the forms shall be retightened and the surface of the hardened concrete shall be thoroughly cleaned and saturated with water, with all free standing water removed. The placing of concrete shall be carried out continuously from joint to joint. The face edges of all joints which are exposed to view shall be carefully finished true to line and elevation.

4.20 Concreting in Cold Weather

The Contractor shall accept full responsibility for the protection of concrete during adverse weather conditions.

When the ambient air temperature is, or is expected to be below 5°C, or when determined by the Consultant, the following provisions for cold weather concreting shall be put in place:

(1) All aggregate and mixing water shall be heated to a temperature of at least 20°C but not more than 65°C. The aggregates may be heated by either dry heat or steam; in the latter case the quantity of mixing water may need to be reduced. The temperature of the concrete shall be between 10°C and 25°C at the time of placing in the forms. In the case of mass pours, the Consultant may alter the temperature requirements to suit.

(2) The Contractor shall enclose the structure in such a way that the concrete and air within the enclosure can be kept above 15°C for a period of 7 days after placing the concrete. The enclosure shall be constructed so that a minimum 300 mm clearance exists between the enclosure and the concrete. To prevent overheating, the air temperature within the enclosure shall be monitored frequently, especially during the first 24 hours.

The relative humidity within the enclosure shall be maintained at not less than 65%. Heaters must be kept well clear of the formwork housing. Adequate ventilation is required to provide air for combustion, and to prevent the accumulation of carbon dioxide which can be harmful to the concrete. The use of salamanders, coke stoves, oil or gas burners and similar spot heaters which have an open flame and intense local heat is prohibited without the Consultant's specific acceptance.

The system of heating, and positioning of steam outlets, heaters, and fans, is to be designed to give the most uniform distribution of heat possible, and is subject to the review and acceptance of the Consultant.

(3) Before placing concrete, adequate pre-heat shall be provided to raise the temperature of formwork, reinforcing steel, previously-placed concrete, and/or soil to at least 10°C. The Contractor shall be responsible to make all arrangements for heating, and to ensure continuous protection from unsatisfactory temperature and moisture conditions during the curing period. The Consultant's acceptance of the Contractor's arrangements shall be obtained; it will be a requirement that pre-heat is adequate, in the Consultant's opinion, to ensure that no portion of the fresh concrete is damaged by freezing, or curing retarded by cold temperatures.

(4) Fully insulated formwork may be proposed as an alternative to provision of further heat during the curing period. Such formwork shall be designed and insulated with approved materials so that the initial heat of the mix, and the heat generated during the hydration of the cement, is retained to provide the specified curing conditions. The adequacy of the protection is the Contractor's responsibility.

(5) Protection and heating, where used, shall be withdrawn in such a manner so as not to induce thermal shock stresses in the concrete. The temperature of the concrete shall be gradually reduced at a rate not exceeding 10°C per day to that of the surrounding air. To achieve this, in a heated housing, the heat shall be slowly reduced and then shut off, and the whole housing allowed to cool to air temperature before the housing itself is removed. However, the protection shall not be removed until the temperature of the concrete has fallen to within 10°C of the temperature of the outside air.

4.21 Depositing Concrete Under Water

Concrete shall not be deposited in water except as specified and with the acceptance of the Consultant and under his immediate supervision. Anti-washout admixtures incorporating viscosity modifiers (whelan gum, etc.) may be used when specifically reviewed and accepted by the Consultant.

Concrete to be deposited in water shall be of the specified class, with mix design modified to yield 150 mm to 175 mm slump, and with an excess of 15% of the cement quantity added beyond this the designed amount. The mix should contain an approved “anti-washout” admixture to enhance the performance of the mix. The concrete temperature shall be between 10°C and 25°C.

To prevent segregation, concrete shall be carefully placed in a compact mass, in its final position, by means of a concrete pump. When specifically reviewed and accepted by the Consultant, a properly designed and operated tremie may be used. The concrete shall not be disturbed after being deposited. Still water shall be maintained at the point of deposit and the forms underwater shall be watertight.

When placing concrete under water, the discharge end of the concrete pump line shall be lowered to the bottom of the form or hole. Pumping shall then proceed with the end of the discharge line being continually buried no less than 500 mm below the surface of fresh concrete at all times, to maintain a seal until the form or hole is completely filled with fresh uncontaminated concrete.

A tremie, when reviewed and accepted, shall consist of a rigid tube having a diameter between 200 mm and 300 mm, and if constructed in sections it shall have flanged couplings fitted with gaskets. The discharge end shall be closed at the start of the work to prevent water entering the tube. The tremie tube shall be kept full to the bottom of the hopper, and water shall be kept out at all times. When a batch is dumped into the hopper, the flow of concrete shall be induced by slightly raising the discharge end, always keeping it in the deposited concrete. The flow shall be continuous until the work is completed. Sufficient tremies shall be used to place the concrete under water such that it is not necessary to move any of the tremies from one portion of the pour to another. The use of non-rigid tremie tubes will not be permitted.

Concrete shall not be placed in water which is below 4°C.

The surface of the concrete shall be kept as nearly horizontal as is practicable at all times. The discharge end of the tremie shall be kept buried at least 300 mm in previously placed concrete.

Dewatering will not be permitted while concrete is being placed. Dewatering may proceed when the concrete seal is sufficiently hard and strong. All laitance or other unsatisfactory material shall be removed from the exposed surface by scraping, chipping or other means which will not injure the surface of the concrete.

4.22 Curing Concrete

4.22.1 General

Freshly deposited concrete shall be protected from freezing, abnormally high temperatures or temperature differentials, premature drying, excessive moisture, and moisture loss for the period of time necessary to develop the desired properties of the concrete.

All exposed concrete surfaces, other than Class HPC which are to receive a Class 2 or 3 finish, shall be moist cured. The Contractor shall cover the concrete surface(s) with a single layer of clean, soaking wet burlap or light colored filter fabric as soon as the surface will not be marred by so doing. The burlap or light colored filter fabric shall be kept continuously wet for 72 hours.

All unexposed concrete surfaces not requiring the application of silane sealer shall receive two applications of an approved curing compound. The rate of each application shall not be less than the rate specified by the manufacturer of the compound. Curing compound shall not be used on any construction joints or when cold weather concreting is in effect.

Where the formwork is left in place for 72 hours or more, no additional curing will be required for either exposed or unexposed concrete surfaces.

4.22.2 Curing Requirements for Concrete Slope Protection

Concrete slope protection shall receive 2 coats of a curing compound acceptable to the Consultant. The first coat is to be applied immediately after the concrete has been satisfactorily finished, and the second coat is to be applied within 3 hours after the application of the first coat. In cases where premature drying is severe or is anticipated to be severe, then moist curing, as specified in 4.22.1, will also be required.

4.22.3 Curing Requirements for Class HPC and Class HPC with Steel Fibres

For Class HPC and Class HPC with steel fibres, fog mist shall be applied continuously from the time of screeding until the concrete is covered with filter fabric or burlap, in such a way as to maintain high relative humidity above the concrete and prevent drying of the concrete surface. Water shall not be allowed to drip, flow or puddle on the concrete surface during fog misting, when placing the filter fabric or burlap or at any time before the concrete has achieved final set. Equipment and materials necessary for the fog mist system shall be demonstrated and approved prior to scheduling and placing of Class HPC.

Two layers of light colored filter fabric (Nilex C-14 or equivalent) or burlap shall be placed on the fresh concrete surface as soon as the surface will not be marred as a result of this placement. A fine spray of water shall be immediately applied to the filter fabric or burlap. Edges of the filter fabric or burlap shall overlap a minimum of 150 mm and shall be held in place without marring the surface of the concrete.

The filter fabric or burlap shall be in a continuously wet condition throughout the curing period, by means of a soaker hose or other means as reviewed and accepted by the Consultant. Curing with filter fabric or burlap and water shall be maintained for a minimum period of 7 days for deck overlay and concrete rehabilitation and 14 days for new bridge construction, with the exception of concrete for blockouts adjacent to deck joints, where the wet cure period is reduced to 3 days followed by the application of a chlorinated rubber curing compound.

During the seven day cure period for Class HPC and Class HPC with steel fibres, following the placement of concrete, the Contractor shall provide protection to ensure that the concrete temperature and the temperature differences remain within the limits specified in 4.4.2(l). The Contractor shall supply and install two thermocouplers, in the centre and at the surface of the concrete, for every 100 m^2 of deck, at locations determined by the Consultant. The Contractor shall monitor and record the temperatures every four hours for the first 3 days after concrete placement and every 12 hours thereafter during remaining curing period. Daily temperature records shall be forwarded to the Consultant and Department.

4.22.4 Class HPC and Class HPC with Steel Fibres

After the curing period and before opening to public traffic, the Contractor and the Consultant shall jointly inspect the dry concrete surface(s) to identify all cracks. The Consultant will plot the width in millimetre and length in linear metres of cracks per square metre and report the findings to the Department. The Contractor shall repair the cracks at his own expense if crack width is 0.2 mm or more. The following procedure shall be used in the treatment of the same:

(a) Blow out cracks clean and dry with a jet of oil-free compressed air.

(b) Seal cracks with a gravity feed epoxy in accordance with the manufacturer's instructions. The gravity feed epoxy shall maximize the penetration by taking into consideration the ambient temperature, the substrate temperature, the viscosity and pot life of the material being used. Gravity feed epoxy material shall be reviewed and accepted by the Consultant and the Department prior to its usage.

(c) When cracks extend the full depth of the deck slab or to the top layer of reinforcement of decks that are cast to grade, epoxy injection will be required. The epoxy material and injection procedure shall be submitted by the Contractor for acceptance of the Department and Consultant.

4.23 Concrete Finishing Under Bearings

All concrete areas on which bearing plates or pads are to be placed are to be at the required elevation, and are to be finished or ground to a smooth and even surface in preparation for bearing plates or pads. The finished surface shall not vary more than 1 mm over an area whose dimensions exceed the dimensions of the bearing plates by 60 mm. Air voids created by forming grout-pad depressions shall be filled with an approved patching material, well in advance of girder erection. In cold weather conditions this work shall be completed while the concrete is still warm.

4.24 Concrete Surface Finish

4.24.1 General

Surfaces requiring concrete finishing, shall conform to the requirements of section 4.16.6, "Surface Defects and Tolerances". All mortar patches shall be cured as specified in section 4.22, "Curing Concrete".

On unexposed concrete surfaces all cavities, honeycomb, and other deficiencies shall be thoroughly chipped out, cleaned, and after having been kept saturated with water for a period of not less than 30 minutes, shall be filled with cement mortar.

On exposed concrete surfaces to 600 mm below grade or, in the case of river piers, 600 mm below lowest water level, surface finishes shall be applied as follows:

Class 1 Ordinary Finish
- all exposed concrete surfaces unless other finishes are specified.

Class 2 Rubbed Finish
- solid shaft river piers
- inside surfaces of curb, parapet and sidewalk
- median vertical faces.

Class 3 Bonded Concrete Finish
- abutment seats except top surface
- pier caps except top surface
- exterior faces of curtain walls/wingwalls
- grade separation piers except top surfaces
- exterior concrete girder faces
- exposed end surfaces of cast-in-place concrete diaphragms
- underside of the deck overhang to top flange of girder
- exterior surfaces of curb, parapet and sidewalk.

Class 4 Floated Finish
- top surfaces of concrete deck and roof slabs which are to receive waterproofing membranes and wearing surfaces.

Class 5 Floated Surface Finish, Broomed Texture
- top surfaces of curbs, sidewalks, and medians
- approach slab concrete which will be covered by a wearing surface only (without waterproofing membrane)
- concrete slope protection.

Class 6 Floated Finish, Surface Textured
- top surfaces of deck, roof and approach slabs which will not be covered with either waterproofing membrane or wearing surface.

Only approved wood or magnesium floats shall be used for finishing concrete.

4.24.2 Class 1. Ordinary Surface Finish

Unformed Surfaces - Immediately following placing and compacting, the concrete shall be screeded to conform to the required surface elevations, and then trowelled to ensure that the surface is free from open texturing, plucked aggregate, and local projections or depressions.

Formed Surfaces - Immediately following the removal of forms, all fins and irregular projections shall be removed from all surfaces. On all surfaces the cavities produced by form ties, and all other holes, honeycomb areas, broken corners or edges and other defects, shall be thoroughly chipped out, cleaned, and after having been kept saturated with water for a period of not less than 30 minutes, shall be filled with cement mortar. Mortar shall be not more than one hour old. The mortar patches shall be cured as specified under "Curing Concrete". All concrete joints in the completed work shall be left carefully tooled and free of all mortar and concrete. The joint filler shall be left exposed for its full length with clean and true edges.

4.24.3 Class 2. Rubbed Finish

Immediately following the removal of forms, all fins and irregular projections shall be removed from all surfaces. All lines that are not true must be corrected by chipping, grinding or patching as necessary. Parging to correct irregularities will not be permitted. On all surfaces, the cavities produced by form ties, air bubbles and all other holes, honeycomb areas, broken corners or edges and other defects, shall be thoroughly exposed by wire brushing with a stiff bristled, powered, wire brush. The cleaned surface, after having been kept saturated with water for a period of not less than 30 minutes, shall be filled with cement mortar. Mortar shall be not more than one hour old. The mortar patches shall be cured as specified under "Curing Concrete". All concrete joints in the completed work shall be left carefully tooled and free of all mortar and concrete. The joint filler shall be left exposed for its full length with clean and true edges. The small surface voids formed by air bubbles must be filled by rubbing a thin grout composed of bonding agent, water, clean fine sand and cement into the moistened surface. When the patching and filling have adequately hardened, a carborundum stone shall be used to finish the surface to a smooth, uniform and closed texture. Any voids opened during the stone rubbing process shall be re-filled.

It is essential that the prepared concrete surface, including all patching and filling be uniform in colour and texture. All portions of bridge elements, including those cast in more than one pour, shall be of the same colour and texture. Any staining caused by cement, water, weather, or other conditions shall be prevented, removed, or covered by methods and materials acceptable to the Consultant. After the surface preparation has been completed to the satisfaction of the Consultant, the Contractor shall apply sealer as specified in section 4.25.

If uniformity of colour is not achieved to the satisfaction of the Consultant, the Contractor, rather than applying the sealer as specified in 4.25, shall supply and apply an approved pigmented concrete sealer as specified for Class "3" "Bonded Concrete Finish".

4.24.4 Class 3. Bonded Concrete Surface Finish

Surface preparation shall be done as is specified for Class "2" Rubbed Finish, except that uniformity in colour is not required.

After the surface preparation has been completed to the satisfaction of the Consultant, the Contractor shall then supply and apply an approved pigmented concrete sealer, which meets the requirements for a type 3 sealer of the "Alberta Transportation Concrete Sealer Test Procedure - B388".

The pigmented concrete sealer shall be applied in accordance with the manufacturer's specifications. The colour of the proposed coating, which shall be similar to the natural colour of cured concrete, must be acceptable to the Consultant before application of the coating. A minimum of two applications of the pigmented sealer are required. The Contractor shall ensure that no colour variation is visible, and shall match the colour of any previously painted adjoining surfaces. Acceptance of the pigmented sealer used will not be taken to relieve the Contractor of full responsibility for its acceptable performance and appearance.

4.24.5 Class 4. Floated Surface Finish

Unless otherwise noted on the drawings, concrete which is to receive a waterproofing membrane and a final wearing surface, shall be floated and trowelled as necessary to provide a smoothly textured surface.

4.24.6 Class 5. Floated Surface Finish, Broomed Texture

The concrete surface shall be floated and trowelled as necessary to produce a smooth surface. The surface shall not vary more than 3 mm under a 3 m long straightedge.

After the concrete has set sufficiently, the surface shall be given a transversely broomed finish using a coarse broom to produce regular corrugations to a maximum depth of 3 mm. An edging tool shall be used at all edges and expansion joints. Where indicated on the drawing, sidewalk surfaces shall be laid out in blocks using an acceptable grooving tool.

4.24.7 Class 6. Floated Finish, Surface Textured

After the concrete has been bull floated, it shall be given a suitable texture with a “flat wire” texture broom having a single row of tines. The desired texture is transverse grooving which may vary from 1.5 mm width at 10 mm centres to 5 mm width at 20 mm centres, and the groove depth shall be 3 mm to 5 mm. This operation shall be done at such time and in such manner that the desired texture will be achieved while minimizing the displacement of the larger aggregate particles or steel fibres. The textured surface shall be uniform and consistent.

Following the surface texturing, a strip of the concrete along the inside curb line, shall be trowelled smooth and the surface left closed.

4.25 Sealer

An approved Type 1c sealer shall be applied to all concrete surfaces which are susceptible to deterioration by water and de-icing salts. This shall include all concrete surfaces to 600 mm below grade, or in the case of river piers 600 mm below lowest water level, or as specified and shall include all surfaces which are to receive a Class 2, Class 5 and Class 6 Finish. This does not apply to surfaces covered with either waterproofing membrane and ACP wearing surface, drain troughs and concrete slope protection. Sealer will not be required on the underside of bridge decks and on concrete diaphragms in the interior bay areas, however the faces of the end diaphragms nearest the abutment backwalls, inside face of backwall and top surface of abutment seat, excluding bearing recess pockets, shall be sealed.

Type 1c sealers shall meet the current “Specifications for the Supply of Concrete Sealers, Evaluation Procedures for Sealers Used on Concrete Bridge Elements” (B388).

The sealer shall be applied in accordance with the manufacturer's recommendations, however, the application rate shall be increased by 30% from that indicated on the approval list. Before applying the sealer the concrete shall be cured for at least 14 days. Mortar patches shall be cured for at least two days. The concrete surface shall be dry, and air blasted to remove all dust and accepted by the Consultant prior to applying sealer. In order to ensure uniform and sufficient coverage rates the Contractor shall apply measured volumes of sealing compound to appropriately dimensioned areas of concrete surface, using a minimum of 2 coats.

Payment for **Sealer** will be made on the basis of the lump sum price bid which shall include full compensation for the cost of all materials, labour, tools and equipment required to acceptably complete this work.

4.26 Concrete Strength Requirements

The Department reserves the right to reject any concrete whatsoever which does not meet all the requirements for that class of concrete. The Department may however, accept concrete the strength of which falls below the specified strength requirements.

In this case, payment will be made in accordance with 4.26.1. The bid price can either be unit price or lump sum.

4.26.1 Payment Scales

Class B Concrete, Pile Concrete, 25 MPa

Strength Test Results	
25 MPa and over	Full bid price
24 MPa to 25 MPa	Bid price less $15 per cu. metre
23 MPa to 24 MPa	Bid price less $30 per cu. metre
22 MPa to 23 MPa	Bid price less $45 per cu. metre
21 MPa to 22 MPa	Bid price less $60 per cu. metre
20 MPa to 21 MPa	Bid price less $80 per cu. metre

Modified Class C Concrete, 35 MPa

Strength Test Results	
35 MPa and over	Full bid price
34 MPa to 35 MPa	Bid price less $15 per cu. metre
33 MPa to 34 MPa	Bid price less $30 per cu. metre
32 MPa to 33 MPa	Bid price less $45 per cu. metre
31 MPa to 32 MPa	Bid price less $60 per cu. metre
30 MPa to 31 MPa	Bid price less $80 per cu. metre
29 MPa to 30 MPa	Bid price less $110 per cu. metre
28 MPa to 29 MPa	Bid price less $150 per cu. metre
27 MPa to 28 MPa	Bid price less $200 per cu. metre

Class HPC and Class HPC with Steel Fibres Concrete, 45 MPa

Strength Test Results

45 MPa and over	Full bid price
44 MPa to 45 MPa	Bid Price less $20 per cu. metre
43 MPa to 44 MPa	Bid Price less $50 per cu. metre
42 MPa to 43 MPa	Bid Price less $90 per cu. metre
41 MPa to 42 MPa	Bid Price less $140 per cu. metre
40 MPa to 41 MPa	Bid Price less $200 per cu. metre

Class D Concrete, 30 MPa

Strength Test Results

30 MPa and over	Full bid price
29 MPa to 30 MPa	Bid price less $15 per cu. metre
28 MPa to 29 MPa	Bid price less $30 per cu. metre
27 MPa to 28 MPa	Bid price less $45 per cu. metre
26 MPa to 27 MPa	Bid price less $60 per cu. metre
25 MPa to 26 MPa	Bid price less $80 per cu. metre
24 MPa to 25 MPa	Bid price less $110 per cu. metre.

Class S Concrete, 20 MPa

Strength Test Results

20 MPa and over	Full bid price
18 MPa to 20 MPa	Bid price less $15 per cu. metre
16 MPa to 18 MPa	Bid price less $35 per cu. metre

The reduced payment shall apply to the volume of concrete represented by the strength test as defined in Section 4.9.1.

Concrete with strengths below the scales shown;

i.e.
- Class B and Pile concrete below 20 MPa
- Modified Class C concrete below 27 MPa
- Class HPC and Class HPC with steel fibres concrete below 40 MPa
- Class D concrete below 24 MPa
- Class S concrete below 16 MPa

will be rejected.

4.26.2 Open to Traffic

The bridge shall not be opened to traffic until the deck or overlay concrete has attained a minimum compression strength of 70% of the design strength. The concrete shall be cured in accordance with Section 4.22 of the specification. The Contractor shall be responsible for all costs associated with any additional testing that may be required to satisfy the strength requirement.

4.26.3 Coring for Compressive Strength Testing

Coring to confirm or contest low concrete strength test results shall be reviewed and accepted by the Department. When coring is acceptable, arrangements shall be made by the Contractor, through the Consultant, to employ an independent, certified testing service, all at the expense of the Contractor. The cores shall be taken and tested within seven days of the testing of the twenty-eight day cylinders representing the concrete in question. Where practical, three 100 mm ∅ cores shall be taken for each strength test previously taken, and there shall be no doubt that the cores taken, and the cylinders under consideration represent the same batch of concrete. Cores may not be taken unless the Consultant's representative is present. Cores shall be tested by an independent CSA certified laboratory and in accordance with the requirements of CSA Standard A23.2-14C. The average strength of the cores as reported by the independent testing service shall constitute a test.

In cases where the concrete strength, as indicated by the cores, is higher than the strength based on the concrete cylinder results, the core results shall be used as the basis for acceptance of and payment for the concrete. If the core strengths are lower than the strength from the concrete cylinder tests, the cylinder tests shall govern.

4.27 Measurement and Payment

Payment will be made on the basis of the actual volume within the neat lines of the structures as shown on the drawings or revised by authority of the Department and Consultant, except deductions will be made for volume of concrete displaced by ducts and voids, and by timber, pipe, or concrete piles. The volume of a metre of timber pile will be assumed to be 0.08 m^3. No deduction will be made for the volume of concrete displaced by steel reinforcement, expansion material or steel H-piles, nor for fillets, scoring and chamfers 600 mm^2 or less in cross-section area.

When it is specified on the drawings that concrete in footings is to be placed against undisturbed soil or set in rock, and where the excavation is made wider than the neat lines of the footing as shown, the Contractor shall supply and place the excess volume of concrete at his own expense.

In the case of drilled cast-in-place concrete piles where the drilled holes are made larger than required by the drawings, the additional volume of pile concrete required to fill the enlarged hole shall be supplied and placed by the Contractor at his expense.

An interim payment in the amount of 80% of full value will be made if the concrete has been placed acceptably, and the 7 day test cylinder strength indicates that the concrete will reach the acceptance range of specified strength. Partial payment in advance of 28 day test results will not be deemed to constitute acceptance of the concrete, nor operate to limit in any way the requirements of Section 4.26 of these specifications or Section 1.2.24 of the General Specifications.

Final payment will not be made until the specified concrete finish is acceptably completed, and the 28 day strength tests show that the concrete meets the strength requirement of the specification, or indicate what deduction is to be made for under-strength concrete.

The payment for concrete shall include full compensation for the cost of furnishing all material, tools, equipment, falsework, forms, bracing, labour, curing, heating, surface finish and all other items of expense required to complete the concrete work shown on the drawings, and as outlined in the specifications.

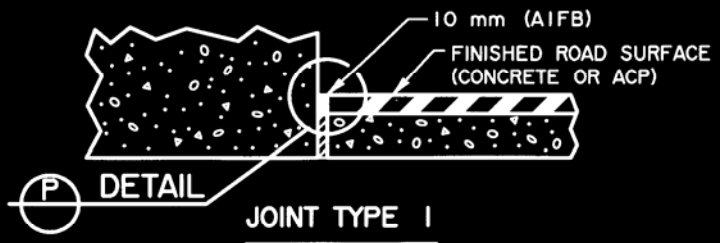

JOINT TYPE 1

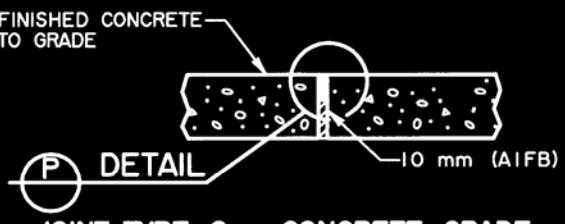

JOINT TYPE 2 - CONCRETE GRADE

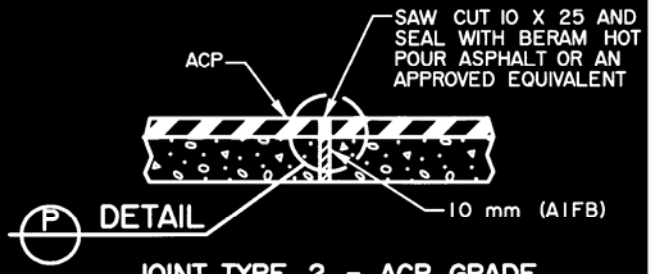

JOINT TYPE 2 - ACP GRADE

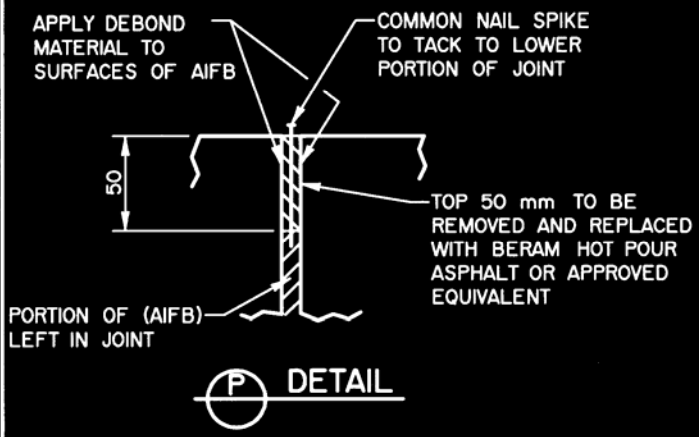

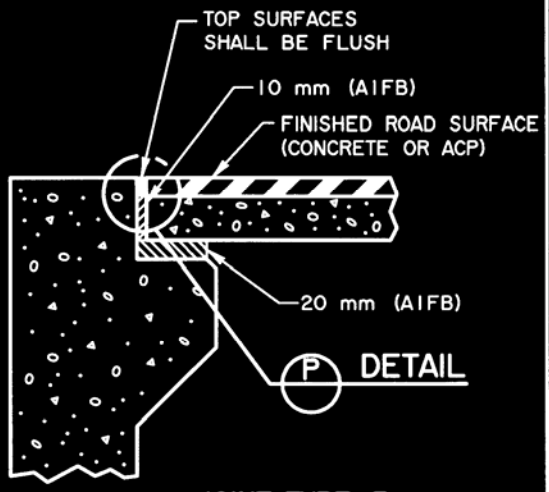

JOINT TYPE 3

GENERAL NOTES

- DIMENSIONS ARE GIVEN IN mm. DETAILS ARE NOT TO SCALE.
- ASPHALT IMPREGNATED FIBREBOARD (AIFB) SHALL CONFORM TO THE CURRENT ASTM SPECIFICATION D1751 FOR PREFORMED EXPANSION JOINT FILLERS.

NO	DATE	REVISIONS	BY
5	2003-04-17	REVISED JOINTS TO INCLUDE ACP SURFACE	RY
4	99-04-14	REVISED JOINT 3	RY
3	99-03-29	BEB CHANGED TO TSB	RY
2	94-11-30	PAGE NUMBER	RJR
1	87-03-04	REDRAWN FROM S-1411	DHQ

7

Alberta TRANSPORTATION AND UTILITIES
TECHNICAL STANDARDS BRANCH

STANDARD CONCRETE JOINTS

DESIGNED	DRAWN	DATE	APPROVED	SIGNATURE	DATE	PAGE 5	DRAWING
DHQ	MIK	87-03-04	EXECUTIVE DIRECTOR		May 8/87	4.33	S-1411-87

PLOTTED APR 17, 2003 S1411X87 .RV5

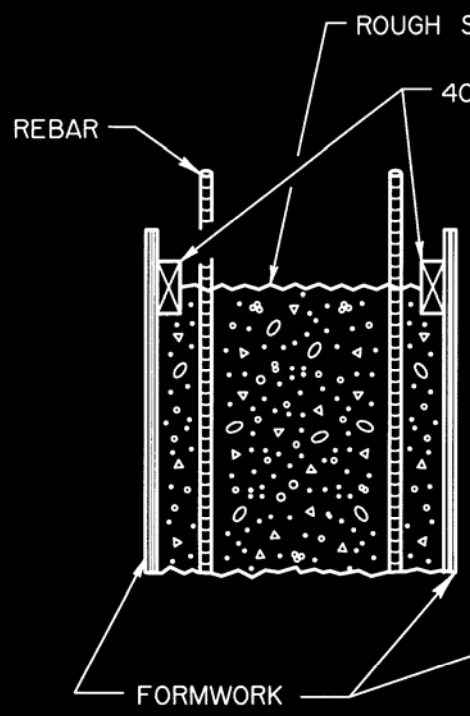

WALL OR PIER SHAFT DETAIL

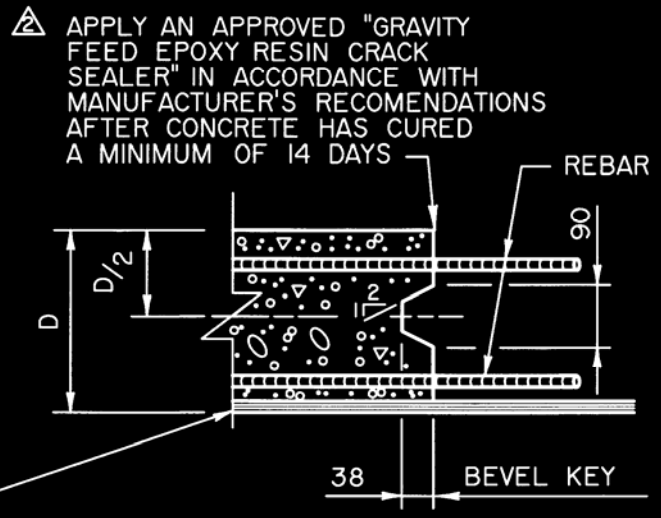

SLAB DETAIL

GENERAL NOTES

- DIMENSIONS ARE GIVEN IN mm. DETAILS ARE NOT TO SCALE.
- SURFACES OF HORIZONTAL JOINTS SHALL BE THOROUGHLY CONSOLIDATED AND INTENTIONALLY LEFT IN A ROUGHENED CONDITION.
- JOINTS SHALL BE CLEANED OF SURFACE LAITANCE AND OTHER FOREIGN MATERIALS PRIOR TO PLACING NEW CONCRETE.

8

DRAFTING STANDARDS PAGE: 6.3

NO	DATE	REVISIONS	BY
4			
3			
2	01-06-06	SLAB DETAIL JOINT REVISED	RY
1	99-04-12	REDRAWN FROM S-1412-98 REV 1	RY

Alberta TRANSPORTATION AND UTILITIES
TECHNICAL STANDARDS BRANCH

STANDARD
CONSTRUCTION JOINTS

DESIGNED	DRAWN	DATE	APPROVED	SIGNATURE	DATE	PAGE	DRAWING
RY	WS	99-04-12	EXECUTIVE DIRECTOR		May 8/07	4.35	S-1412-99

PLOTTED JUNE 06, 2001 S1412X99.RVI

City of Edmonton Specifications

1. GENERAL

1.1 SECTION INCLUDES

1.1.1 Production of Portland cement concrete for pavement and associated structures.

1.1.2 Additional requirements for concrete mix design, quality control, quality assurance, and placement for pavement and associated structures.

1.2 RELATED SECTIONS

Trench and Backfill	Section 02318
Portland Cement Concrete	Section 03055
Concrete Forms and Accessories	Section 03100
Reinforcing Steel	Section 03210

1.3 SUBMITTALS

1.3.1 Submit a mix design for each designated class of concrete to the Engineering Services Section, Transportation Department, at least 14 days prior to initial concrete work and when there is a change in materials, sources or proportions. Submit separate mix designs specifically designed for particular placement applications (i.e. pumping, hand placement, slip form placement, etc.)

1.3.2 Submit a complete petrographic analysis of the fine and coarse aggregate proposed for use with the concrete mix design. The petrographic analysis shall include the results of abrasion loss, $MgSO_4$ soundness loss and cement-aggregate reactivity evaluation.

1.3.3 Submit the results of ironstone determination to the Engineering Services Section, Transportation Department, at least once per week.

1.3.4 Submit physical fly-ash test reports to the Engineering Services Section, Transportation Department, monthly or as requested by the City.

1.4 QUALITY ASSURANCE

1.4.1 To **Section 03055** Portland Cement Concrete.

1.5 QUALITY CONTROL

1.5.1 The supplier shall conduct a quality control program that will ensure their concrete product meets the specifications. The supplier shall provide test results, if requested by the Engineer. The quality control program should be conducted at the plant with corresponding spot checks at the jobsite. Construction sites are not to be used as reactionary quality control points by the supplier to deficiencies in the supplied product through excessive or continuous retempering of the mix.

1.5.2 Quality control testing initiated by the supplier shall be performed by a CSA or ACI certified technician.

2. PRODUCTS

2.1 MATERIALS

2.1.1 **Portland Cement:** To **Section 03055** Portland Cement Concrete

2.1.2 **Aggregate:** To **Section 03055** Portland Cement Concrete, and as supplemented below:

2.1.2.1 Petrographic Analysis: To be performed by a qualified laboratory to CAN/CSA-A23.2-15A.

2.1.2.2 Ironstone Content: To be performed by an approved facility to the Method for Ironstone Content Determination in Fine and Coarse Concrete Aggregates, which is available from the Engineering Services Section, Streets Engineering Branch, Transportation Department. Do not use aggregate until the corresponding results have been reviewed by the Engineer. Ironstone content in coarse aggregate shall not exceed 1.0% by mass of the total coarse sample (retained on the 5 mm sieve and larger), and in fine aggregate shall not exceed 1.5% by mass of the total dry, unwashed fine aggregate sample (passing the 5 mm sieve to that retained on the 2.5 mm sieve). Any concrete supplied with aggregate exceeding the specified ironstone content will be rejected, and shall be removed by the Contractor as directed by the Engineer.

2.1.3 **Water:** To **Section 03055** Portland Cement Concrete

2.1.4 **Fly Ash:** For Class A,B,and C concrete no replacement of the specified minimum cement content with fly ash from the commencement of the construction season to May 15 and after September 30 unless permitted by the City Engineer.

2.1.5 **Sulfate Resistant Concrete:** Concrete using Type HS (High sulfate-resistant hydraulic cement) cement shall not be placed after September 30, for Class A, B, and C concrete.

2.1.6 **Curing compound:** to ASTM C309, type 2, class B, white pigmented, resin based, liquid membrane-forming compound.

2.1.7 **Preformed Joint Filler:** to ASTM D1751.

2.1.8 **Joint Sealant:** to ASTM D1190, hot-poured elastic type.

2.1.9 **Forms:** To **Section 03100** Concrete Forms and Accessories.

2.1.10 **Reinforcement:** To **Section 03210** Reinforcing Steel.

2.2 MIX DESIGN

2.2.1 Mix design criteria for each class of concrete:

Spring and Fall Mixes

Class	Minimum 28 Day Compressive Strength (MPa)	Slump (mm)	Entrained Air Limits (% by volume)	Maximum Aggregate Size (mm)	Maximum Water to Cementing Materials Ratio (by mass)	Minimum Portland Cement Content (kg/m^3)	Cement Type
A	30	60 ± 20	5.5 - 8.0	20	0.45	335	GU*
B	30	60 ± 20	5.5 - 8.0	20	0.45	335	GU*
C	30	60 ± 20	> 5.5	20	0.45	335	GU*
D	30	100 ± 30	5.5 - 8.0	20	0.45	335	HS*
E	30	80 ± 20	5.5 - 8.0	20	0.45	300	HS*

Summer Mixes

Class	Minimum 28 Day Compressive Strength (MPa)	Slump (mm)	Entrained Air Limits (% by volume)	Maximum Aggregate Size (mm)	Maximum Water to Cementing Materials Ratio (by mass)	Minimum Portland Cement Content (kg/m^3)	Cement Type
A	30	60 ± 20	5.5 - 8.0	20	0.45	302	GU*
B	30	60 ± 20	5.5 - 8.0	20	0.45	302	GU*
C	30	60 ± 20	> 5.5	20	0.45	302	GU*
D	30	80 ± 20	5.5 - 8.0	20	0.45	335	HS*
E	30	80 ± 20	5.5 - 8.0	20	0.45	300	HS*

* Note: GUb and HSb cements can be used only upon approval of the Engineer

2.2.1.1 Class C concrete: shall attain the minimum compressive strength corresponding to the percentage of entrained air in the plastic concrete as follows.

Air Content (%)	Minimum 28 Day Compressive Strength (MPa)
5.5 to 5.9	30.0
6.0 to 8.0	42 - (2 * Air Content)
greater than 8.0	26.0

2.2.1.2 **High Early Strength Concrete:** For special situations or conditions the Engineer may require that the specified 28 day compressive strength be met in 7 days.

2.2.1.3 If any class of concrete is to be placed by pumping, the specified slump and air content shall be met at the point of pump discharge. Samples for testing will be obtained at the point of pump discharge.

2.2.1.4 For class C extruded parapet retaining walls and New Jersey Barriers the mix shall contain 0.6kg of Grace micro fibres or approved equivalent per m^3 of concrete.

2.2.1.5 For class E concrete the following mix conditions shall apply:

A minimum ratio of supplementary cementitious materials to total mass of cementitious materials of 0.15, and

A minimum sand content of 45% by total weight of aggregate.

2.2.2 **Application of concrete classes:**

Class A: One course exposed pavements, commercial and residential alley crossings.

Class B: Unexposed pavement base.

Class C: All exposed road associated works including curb and gutter, sidewalks, walkways, swales, medians, New Jersey barriers and parapet walls.

Class D: Structural pile foundations.

Class E: Exposed retaining walls.

2.2.3 **Seasonal concrete mix requirements:**

Spring Mixes

From the commencement of the construction season to May 15, or as directed by the City: no replacement of the minimum cement content with fly ash (clause 2.1.4) is permitted.

Summer Mixes

From May 16 to September 30: no more than 10% of the specified minimum cement content may be replaced with fly ash.

Fall Mixes

From October 1 to October 15: no replacement of the minimum cement content with fly ash is permitted (clause 2.1.4) and type HS cement may not be used (clause 2.1.5).

Cold Weather Mixes

From October 16 to the end of the construction season, or as defined by the Engineer: meet the requirements for cold weather concrete in clause 2.2.4.

2.2.4 **Cold weather concrete:** All classes of concrete placed after October 15 shall attain a minimum compressive strength of 27.0 MPa in 7 days and shall be provided with cold-weather protection to clause 21.2.3.4, CAN/CSA A23.1. High early strength concrete (as defined in clause 2.2.1.2) shall attain a minimum compressive strength of 30.0 MPa in 7 days and shall be provided with cold weather protection to clause 21.2.3.4, CAN/CSA A23.1 (type 2 curing). This cold weather protection must be adequate to maintain concrete surface temperatures at a minimum of 10° C for a period of 7 days following placement.

2.2.5 **For slipformed (machine placed) concrete, limit slump as follows:**

20 ± 10 mm for curb, curb and gutter and New Jersey barrier, and
30 ± 10 mm for walk, monolithic walk and pavement.

2.2.6 Type HE or Type HS cement may be substituted for Type GU cement, except as limited in clause 2.1.5.

2.2.7 Class A, C and E concrete may be subjected to air-void examination.

2.2.8 Concrete mix designs shall be prepared by a CSA approved laboratory, or by a concrete supplier with the capability and a facility approved by the City.

2.2.9 If requested, the supplier shall provide evidence that proportions in the mix design will produce concrete of the quality specified. Include strength tests on trial mixes made under plant conditions.

2.2.10 Concrete production may not proceed until the City has approved the applicable mix design.

3. EXECUTION

3.1 PLACING

3.1.1 Place concrete to **Section 03055** Portland Cement Concrete.

3.2 FINISHING

3.2.1 Finish concrete to **Section 03055** Portland Cement Concrete, and as supplemented below:

3.2.2 **Brush or Broom Finish:** Use a brush or a broom with nylon bristles that can form surface grooves no deeper than 3 mm. Remove excess water from the bristles before brushing. Brush in the designated direction.

3.2.3 **Burlap Finish:** Drag multiple ply burlap equal in length to the width of the slab and having at least a 1 m strip in contact with the plastic concrete surface. Drag carefully in the direction of concrete placement to produce a finished surface simulating a sandy texture with no disfiguring marks.

3.3 JOINTS

3.3.1 Construct joints as required in each type of construction to the following standards as applicable.

3.3.2 **Crack-Control Joints:** intended to control the location of shrinkage cracks in hardening concrete. Construct joints to the indicated dimensions, spacing, and pattern by any of the following methods:

3.3.2.1 Formed Joint: Form the groove by inserting a metal or fibre strip, or polyethylene film into the plastic concrete. Finish the edges to a 6 mm radius. Remove the insert immediately after the initial set of the concrete. Seal the joint with a specified sealant.

3.3.2.2 Tooled Joint: Hand form the groove using a jointing tool with a thin metal blade to impress a plane of weakness into the plastic concrete. Finish the edges to a 6 mm radius. Seal the joint with a specified sealant.

3.3.2.3 Sawed Joint: Cut the groove with a concrete saw as soon as the concrete surface has hardened sufficiently to resist raveling as the cut is made, but before shrinkage cracks form in the concrete. The Contractor is responsible for the proper timing of the saw cut. Immediately flush the saw cut clean with water. Once the joint surfaces are dry, seal the joint with a specified sealant.

3.3.3 **Isolation Joint:** required where concrete is placed adjacent to an immovable structure or where indicated on the Drawings. Construct the joint by sawing or forming to create a clean break through the full cross-section of the concrete member. Make the joint wide enough to permit a snug fit for the pre-formed joint filler. Alternatively, place the pre-formed joint filler against the structure and pour the concrete against the pre-formed joint filler.

3.3.4 **Construction Joint:** required between concrete pours or for joining new concrete to existing work. Construct the joint with a keyway, dowels or tie bars as detailed on the drawings or as directed by the Engineer. Finish edges to a 6 mm radius. Vertically trim the existing concrete by sawing at least 50 mm deep and breaking. Leave the joint form in place until the concrete has set, then remove the joint form without damaging the concrete.

3.4 PROTECTION AND CURING

3.4.1 Protect freshly placed concrete from freezing, premature drying, temperature extremes, adverse weather conditions, and physical disturbance to clause 7.4, CAN/CSA-A23.1, and as supplemented below.

3.4.2 **Cold Weather Protection:** Concrete shall be protected from freezing for a minimum of 4 days after placement or for the time necessary to achieve 75% of the specified 28-day compressive strength.

3.4.3 **Membrane Curing:** Cure exposed concrete surfaces using a specified curing compound applied with a pressurized spray nozzle. Cover the entire exposed surface with an unbroken and uniform film at a rate depending on surface roughness but not less than 1 litre per 4 m^2 of surface. Membrane curing will not be required when the maximum daily air temperature for the 72 hours following placement of the concrete is not expected to be greater than 5º C.

3.4.4 **Moist Curing:** Use where specified or directed by the Engineer. After the concrete has set, maintain exposed surfaces continuously moist using wet burlap or polyethylene film in contact with the concrete for a minimum of 7 consecutive days after placement when Type GU or Type HS cement is used, or a minimum of 3 consecutive days when Type HE cement is used.

3.5 FIELD QUALITY ASSURANCE

3.5.1 The contractor and the concrete supplier shall assist the field technician in obtaining samples for quality assurance testing**.**

3.4.2 The contractor shall suspend pouring operations after sampling until the results of the field quality tests are known.

3.5.2 **Inadequate Protection and Curing**

For concrete where the surface temperature is measured to be below 0º C the concrete may be accepted subject to a pay factor according to Table 03060.1.

TIME AFTER PLACEMENT THAT CONCRETE TEMPERATURE DROPS BELOW 0º C	PAY FACTOR (% of Contract Price)
> 96 hours	100.0
72 to 96 hours	80.0
48 to 72 hours	70.0
< 48 hours	Remove and Replace

TABLE 03060.1 COLD WEATHER PROTECTION PAY FACTORS

3.5.3 **Deficient Slump**

For any load of concrete, if the measured slump is outside the specified limits, a check test is taken on another portion of the load, or a retest is done if retempering with water is permitted by the Engineer. If the second test fails, the Engineer may reject that load of concrete including removal of the portion already poured.

3.5.4 **Deficient Air Content**

3.5.4.1 For any load of concrete, if the tested air content is outside the specified limits, the Engineer will require one of the following:

Air content between 5.0% and 5.5%: Concrete poured from the load shall be removed and the rest of the load shall be discarded. However, the Contractor may elect at the Contractor's risk to pour the rest of the load provided that within 40 days of placement, the Contractor submits to the

Engineer proof that the load of concrete meets the required spacing factor as determined from air void examination performed by a qualified laboratory to clause 3.4.4.3, failing which the Contractor shall remove and replace all concrete represented by the failed test.

Air content below 5.0%: Concrete poured from the load shall be removed and the rest of the load shall be discarded.

Air content above 8.0%: Except for class C concrete, concrete poured from the load shall be removed and the rest of the load discarded. For class C concrete where high early strength is not specified, the concrete will be accepted if the specified 28 day strength is met.

3.5.4.2 If the measured air content is below the specified minimum air content, then the contractor may elect to retemper with air entraining admixtures to Section 3055 - Portland Cement Concrete, clause 3.2.6.

3.5.4.3 When Air Void Examination Is Required

The quality assurance laboratory will drill cores from the hardened concrete for air void examination to Section 03055 Portland Cement Concrete, clause 1.4.6, at a frequency of at least one core for each 2 000 m of local and collector sidewalk, curb and gutter or monolithic walk, curb and gutter, or as requested by the City for arterial, industrial or commercial roadways or small residential subdivisions.

3.5.4.4 Where concrete has been rejected and is to be removed for not meeting the spacing factor requirement in Section 03055 Portland Cement Concrete, clause 1.4.6, the Contractor at the Contractor's expense shall prove that the concrete left in place at both ends of the removal meets the specified spacing factor by air void examination to be performed by a qualified laboratory to Section 03055 Portland Cement Concrete. The test results shall be submitted to the Engineer.

3.5.5 **Deficient Strength**

Concrete work for roadways represented by a strength test result which is less than specified may be accepted subject to a pay factor according to Table 03060.2. If strength deficiencies persist, the Engineer will require changes in the concrete mix design for the remainder of the work.

CYLINDER STRENGTH (% of Specified Strength)	PAY FACTOR (% of Contract Price)
97.0	100.0
96.0	99.2
95.0	98.2
94.0	96.9
93.0	95.4
92.0	93.6
91.0	91.7
90.0	89.4
89.0	86.7
88.0	83.5
87.0	79.7
86.0	75.5
85.0	70.0
Under 85.0	No Payment

TABLE 03060.2 CONCRETE STRENGTH PAY FACTORS

3.5.5.1 Optional core strength test:

The Contractor has the option at the Contractor's expense of providing evidence of strength by coring and testing to CAN/CSA-A23.2-14C moisture conditioned, by a qualified laboratory within

7 days of a failed 28-day cylinder test or within 3 days of a failed 7-day cylinder test. Three cores shall be drilled from the hardened concrete represented by the failed cylinder strength tests at locations approved by the Engineer.

The average strength of the 3 cores shall equal 100% of the specified cylinder strength; otherwise, the concrete will be subject to the pay factors of Table 03060.1 on the basis of the cylinder strength tests.

3.5.5.1.1 Optional core strength test results shall be submitted to the Engineer with a copy to the Engineering Services Section, Transportation Department

END OF SECTION

City of Calgary Specifications

CITY OF CALGARY
DESIGN GUIDELINES FOR BRIDGES AND STRUCTURES
SECOND EDITION, 2002

APPENDIX "A1"

HIGH PERFORMANCE CONCRETE SPECIFICATION

1.0 GENERAL

1.1 Scope

.1 This Section outlines the requirements for all High Performance Concrete (HPC) for use in various elements of bridge and other concrete structures.

.2 High Performance Concrete (HPC) specified in this document shall meet a combination of performance, and uniformity requirements that are more stringent than those for normal structural concrete. Some of these performance characteristics are:

- Durability (longer service life)
- Dimensional stability
- Ease of placement without affecting strength
- Early age strength
- Load carrying capacity

The above characteristics shall be obtained by using a specified water-cementitious ratio (*w/cm),* supplementing cementitious component with silica fume and other pozzolans, enhanced concrete mixing and placing procedures, and diligent curing procedures.

.3 The performance characteristics will be measured by conformance to the Plastic Concrete Properties, Hardened Concrete Properties and Durability Properties.

.4 High Performance Concrete shall be used for structure components exposed to the severe field conditions such as temperature fluctuations, cycles of freezing and thawing, presence of de-icing chemicals and heavy traffic loading.

Typically the elements cast with HPC shall include the following structure components:

.1 Bridge decks supported by concrete or steel girders.

.2 Top portion of cast-in place superstructure.

.3 Sidewalks, traffic barriers, medians and curbs within the bridge decks.

.4 Bridge substructure and earth retaining structures within the traffic splash zone.

.5 Specific elements to be constructed using HPC are as indicated in the Contract Documents for the specific project.

.6 This Specification incorporates requirements pertinent to concrete exposure Class C-1, as defined in the CSA Standard A23.1-00 Concrete Materials and Methods of Concrete Construction. Those elements of concrete construction not specifically addressed in this Section shall conform to other Sections of the Specifications, Reference Standards and Drawings included in the Contract Documents.

1.2 Related Work

.1	Concrete Formwork and Falsework:	Section 03100
.2	Concrete Reinforcement:	Section 03200
.3	Cast-in-Place Concrete	Section 03300
.4	Metal Fabrications	Section 05500
.5	Other Sections specific to the Project.	

1.3 Reference Standards

.1 CAN/CSA - A23.1-00 Concrete Materials and Methods of Concrete Construction
.2 CAN/CSA - A23.2 –00 Methods of Test for Concrete
.3 CAN/CSA –A 3000-98 Supplementary Cementing Materials
.4 CAN/CSA –A 283 Qualification Code for Concrete Testing Laboratories
.5 ASTM Standards where noted.

1.4 Supply Provisions

.1 Supply of concrete shall be governed by the provisions of CAN/CSA-A23.1 Clause 16, Table 13, Alternative 1, except that additional requirements as specified herein shall apply.

.2 All ingredients shall be selected on the basis of the performance parameters included in this specification. The Contractor shall design all specified concrete mixes and implement a program of testing as specified herein to demonstrate that the long-term durability of the concrete material will be achieved.

1.5 Quality Control

.1 The Contractor is responsible for the quality of materials and products provided for incorporation in the work and for the quality of the work.

.2 Provide copies of inspection and test reports to the sub-Contractor of work being performed.

.3 The Contractor shall perform inspections and testing necessary to ensure that the works conforms to the requirements of the Contract Documents.

.4 Conform to the standards, as referenced in the Contract Documents.

.5 The Contractor is responsible for the concrete. Submit copies of mix design to the Engineer for review. The review of the mix design does not constitute acceptance of the final product, the requirements for which are included elsewhere in these Specifications.

.6 Tests of cement and aggregates will be required to ensure conformance with requirements stated herein.

.7 Submit Alkali Aggregate Reaction Test results for the aggregate used in the concrete mixes. Test results older than 2 years shall be verified by re-testing.

.8 Where no previous history has been established, pre-construction laboratory or field trials shall be performed to demonstrate the compatibility of admixtures with the cementitious materials.

.9 The Contractor 's Quality Control Plan and record documentation shall be made available for review by the Contractor, upon request.

1.6 Quality Assurance

.1 Cast-in-place concrete to conform to CSA-A23.1 and as modified by the Contract Documents.

.2 The City will undertake, through an independent CSA certified testing firm, random sampling, inspection and testing for the purpose of determining the compliance with the Specifications and other Contract Documents.

.3 Provide access to all portions of work, manufacture and fabrication plants, and cooperate with City's representatives. Concrete sampling will be taken at the point of discharge to the forms.

.4 Make space available for storage and curing of test samples.

.5 Allow ample time for notification, inspection and corrective work, if required, before scheduling concrete placement.

.6 Notify the Engineer and the testing firm twenty-four hours in advance of any concrete placement.

.7 In case of the ambiguity whether the product, system or work conforms to the applicable standard, the Engineer reserves the right to have such product or system tested or re-inspected to ascertain the conformance. The cost of such testing will be borne by the City in the event of conformance and by the Contractor in the event of non-conformance with the Contract Documents.

.8 The City may retain a material testing technician to perform quality assurance audit at the batching plant during the concrete pours.

.9 Upon request, the Contractor shall furnish the Engineer with Concrete Production Records for the concrete used in the Work.

1.7 Concrete Strength Requirements:

.1 In order to conform to the concrete strength requirements of this Specification, the results of tests performed on laboratory cured cylinders for each class of concrete shall meet the following:

.1 The average of all tests shall exceed the specified strength.

.2 The average of any three consecutive tests shall be equal to, or greater than, the specified strength.

.3 No individual strength test shall be in excess of 3.5 MPa below the specified strength.

.2 If any of the foregoing criteria are not met, the Engineer shall have the right to require one or more of the following, the costs of which shall be borne by the Contractor:

.1 Changes in the mix proportions for the remainder of the work.

.2 Additional curing on those portions of the structure represented by the failed test specimens. Testing of in-situ concrete may be requested following the extended curing.

.3 Stop further concrete placement until the Contractor demonstrates through testing of trial mixes, that the revised mix design will produce the specified physical properties.

.4 Removal and replacement of all non-conforming concrete.

.3 If, after the completion of the testing procedure, the Engineer is not satisfied with the indicated quality of the concrete in the structure, the Contractor may be required to strengthen or replace those portions which the Engineer deems to be unsatisfactory. Alternatively, the penalty (or penalties) described in Clause 4 of this Specification may be assessed at the discretion of the Engineer.

1.8 Durability Requirements

.1 Requirements for concrete mix proportions and Plastic Concrete Properties are summarized in **Table A**. Submit detailed mix designs including all components, admixtures and their proportions for review.

.2 The Air Content shall be within the range specified for the class of HPC (see **Table A**). The hardened concrete shall have average Air Void Spacing Factor per lot of no more than 250 μm with no individual test result greater than 300 μm as determined in accordance with ASTM C 457. The air void system will be verified at the discretion of the Engineer.

The spacing factor may depart from these requirements, if its durability factor after 300 rapid freezing and thawing cycles performed in conformance with procedure A of ASTM C 666 is higher than 90%.

Plastic mix air content and the air void system in the hardened concrete shall conform to this Specification regardless of the method of concrete placement. Pumped concrete shall be designed to retain required properties at the point of discharge to the forms.

.3 Rapid Chloride permeability of concrete at 28-32 days determined in accordance with ASTM C1202 shall conform to limits specified in Table B. The Engineer may accept results of verification test performed on cores retrieved from the hardened concrete. Coring of in-situ concrete may be done only upon the approval by the Engineer.

.4 Salt scaling potential shall be verified using the attached modified version of ASTM C-672. Test samples shall be cast from the trial batch mixes and cured for a minimum of 14 days. The test surface shall be the unfinished/formed bottom face of the test slabs. The surface mass loss during 30 cycles of freezing/thawing shall be less than 0.4 kg/m^2 for the mix to be considered acceptable for salt scaling.

.5 The required concrete cover to reinforcement shall be within the limits and tolerances specified in the Contract Documents.

.6 The success and effectiveness of HPC depends not only on material property requirements specified herein, but also on an effective quality control program, and good workmanship in manufacturing, placing and curing the concrete. The Engineer's approval of the Contractor's procedure for concrete placement and curing procedures is required.

Curing shall conform to the requirements spelled out elsewhere in these Specifications. Submit a detailed procedure for curing of concrete including, but not limited to:

- Protection against moisture loss due to temperature and wind.
- Equipment and materials used.
- Detailed schedule of concrete placement, curing, formwork removal and temperature maintenance.

.7 Concrete in place will be evaluated based on the observed tendency for the concrete to crack at 28 days against a measurable expected tolerance. Crack widths greater than 0.2 mm shall be repaired. Crack width measurements will be used to determine the necessity of implementing the method of Crack Repair specified in Clause 3.4.

2.0 PRODUCTS

2.1 General

.1 Materials are to be obtained from the same source of supply or manufacturer for the duration of the project. All exposed concrete is to be consistent in colour.

.2 Documentation indicating the material source/supplier and compatibility of all proposed admixtures and/or accessories in combination shall be submitted with the mix design for review by the Engineer.

2.2 Cementing Materials

.1 Cement: Type 10, Normal Portland cement conforming to CAN/CSA-A5 with separate addition of Silica Fume (see Table A).

.2 Portland silica fume blended cement: Type 10SF, conforming to CAN/CSA A362.

.3 The cement shall not contain a total sodium oxide equivalent in excess of 0.6% by mass.

.4 Type 20 Portland cement may be specified where size of the concrete elements requires restrictions relative to heat of hydration.

.5 Type 30 Portland cement shall not be use in place of Type 10 cement.

2.3 Supplementary Cementing Materials

.1 Silica fume shall meet the requirements for Type U supplementary cementing material as specified in CAN/CSA-A3000-98.

.2 Fly ash shall be Type F pozzolan and shall conform to CAN/CSA-A3000-98, and to the following additional requirements:

.1	Minimum SiO_2 and Al_2o_3 and Fe_2O_3 content	70%
.2	Maximum retained on 45 nM sieve	20%
.3	Maximum loss of ignition	4%
.4	Maximum Na_2O equivalent	3%
.5	Maximum CaO content	8%

.3 The use of flyash to <u>reduce minimum cement contents</u> is not permitted. Supplemental flyash to a maximum of 15% of the cement content will be permitted, provided the **water/cement** ratio does not exceed **0.40**.

2.4 Aggregates

.1 For all concrete mix types, the fine aggregate is to conform to the requirements of CSA-A23.1-00.

Fine aggregate shall be tested in accordance with CSA Test Method A23-7A, “Organic Impurities in Fine Aggregates for Concrete” and produce results not darker than standard (Organic Plate Number 3) colour. Aggregates not complying with the above requirement shall be rejected.

Fine aggregate shall be graded to limits specified in Table 4 of CSA A23.1-00.

.2 For all concrete mix types, the course aggregate is to conform to the requirements of CSA-A23.1 for the relevant exposure class. The aggregate shall conform to Group I grading requirements included in Table 5 of CSA-23.1-00. Petrogrphic analysis: PN max.120.

.3 Aggregates shall not react with alkalis contained within concrete to an extent resulting in significant expansion or cracking of concrete. Evaluation of the potential for alkali-aggregate reactivity and the selection

of the preventive measures shall be performed in accordance with CSA Standard Practice A23.2-27A.

.4 All aggregates shall be tested for presence of deleterious substances and shall conform to Table 6 of CSA A23.1-00.

.5 The source of aggregate and the method of manufacture or production, including type of equipment used shall not be altered for the duration of the project.

.5 Nominal size of coarse aggregate shall be as specified in **Table A**.

2.5 Water

.1 Water for use in production of concrete, surface cleaning, saturation and curing shall be clean and free from injurious amounts of oil, alkali, organic matter, soluble chlorides, sediment or other deleterious matter as per CSA-A23.1.

2.6 Admixtures

.1 Air entraining admixtures shall conform to the requirements of ASTM C260. The admixture shall be of uniform consistency and quality within each container and within the delivery batches.

.2 Water reducing admixtures are to conform to the requirements of ASTM C494, Type A or D. The admixture shall be of uniform consistency and quality within each container and within the delivery batches.

.3 Superplasticizers (high-range water reducers) shall conform to the requirements of CAN3-A266.6, Type SPN or SPR.

.4 Set accelerating admixtures will not be permitted.

.5 Calcium chloride or admixtures containing chloride ions shall not be used in concrete.

.6 No chemical substances other than specified herein shall be added to concrete mix or applied to the surface of concrete without approval by the Engineer.

2.7 Concrete Accessories

.1 All concrete accessories shall be compatible with any sealers or waterproofing membrane used.

.2 Liquid membrane-forming curing compound to conform to ASTM C309.

.3 Membrane curing compound: Sealtight 1220, white, pigmented curing compound by Meadows or approved equal.

.4 Molecular Film: (evaporation reducer): Confilm by Master Builders, or approved equal. Application in accordance with the Manufacturer's recommendations.

.5 Silane Sealer: Type 1c "Penetrating Sealers For Traffic Bearing Surfaces" - Products currently approved by Alberta Transportation.

.6 Pigmented Sealer: Type 3 Pigmented Sealers –Products currently approved by Alberta Transportation. Color to be determined by the Engineer.

.7 Where Fibres are specified: 50mm Xorex steel fibres or approved equal at 60 kg/m^3, unless specified otherwise in the Contract Documents.

2.8 Crack Repair

.1 Modified Methacrylate (MMA) or High Molecular Weight Methacrylate (HMWMA) approved by the Engineer.

.2 Low viscosity (100 cps or less) epoxy sealer: Sikadur 55 SLV or Dural, 333 or approved equal.

2.9 Concrete Mixes –Design and Trial Batch Testing

.1 The Contractor, through his supplier, shall undertake the concrete mix designs and pay for all costs associated with the development, testing and submissions of the mix designs and results of performance testing.

.2 All testing of the concrete shall be the responsibility of the Contractor and shall be performed by an independent, CSA certified testing firm.

.3 Submit mix designs and results of performance testing to the Engineer for review. Mix design documentation shall include all components of the mix and quantities of the materials used. All testing, review and consent to selection of the HPC mix designs must be in place at least two weeks prior to concrete placement.

.4 The Contractor should note that failure to demonstrate the specified concrete performance will result in delays for which no claims can be made against the City.

.5 The design and quality control testing of concrete mixes shall include assessment of compatibility of the Contractor's proposed materials including cement and admixtures, adequate workability of the mixes, as well as the slump and air retention properties of the proposed mixtures.

.6 For all HPC, trial batches shall include cracking potential tests, which shall be done on at least three trial mixes, in accordance with the Standard Method for Testing Cracking Tendency of Concrete. (attached in the Appendix). Note that six weeks are needed for the cracking potential assessment using this test method.

.7 In lieu of the trial batch testing, the Contractor may submit for review and consideration by the Engineer, mix design, laboratory and field test results (Q/C and Q/A), and in-situ tendency to crack forming assessment from previous works. All performance criteria of this Specification shall apply.

.8 Required air content retention shall be a minimum of 70% of initially measured air content after 1 hour of mixing.

.9 Adjustment of air on site may be allowed, provided that the adjustment is done under the supervision of the qualified personnel.

.10 Concrete mixes that will be placed by pump shall be designed for pumping.

.11 Slump retention shall be 75% after 45 minutes.

.12 Superplasticizer shall be used in the High Performance Concrete. Slump measured immediately prior to placing or pumping of concrete shall conform to values specified in **Table A**. Only one re-dose of superplasticizer will be allowed after batching. The Contractor shall ensure that segregation of concrete does not occur. No segregated concrete shall be placed in the work.

.13 Addition of water to the batch is not permitted.

.14 In no case will batch adjustment relieve the Contractor of the responsibility for the durability, strength or acceptability of concrete concerned. The Engineer reserves the right to reject any batch in case of confirmed unacceptability and to require immediate removal of any concrete from this batch, from the work.

.15 Permeability shall be assessed using the rapid chloride permeability test method (ASTM C-1202-97), which shall be done on samples cast from the trial batches of concrete at the age of 28 days. Acceptable level of chloride

permeability for HPC concrete shall be as shown in **Table B**- Performance Characteristics.

.16 Trial batch testing shall include salt scaling potential. Salt scaling potential shall be verified using the modified version of ASTM C-672, attached in the Appendix. Test samples shall be cast from the trial batch mixes and cured for a minimum of 14 days. The test surface shall be the unfinished/formed bottom face of the test slabs. The surface mass loss during 30 cycles of freezing/thawing shall be less than 0.4 kg/m^2 for the mix to be considered acceptable.

.17 Tests of cement and aggregates will be required to ensure conformance with requirements stated herein.

.18 HPC required mix properties shall be as shown in **Table A – Mix Properties**.

TABLE A – Mix Properties

Mix Type	Structure Element/ Location	Cementitious Admixtures (Typ.)	Coarse Aggr. Max. (mm)	Cement Content (kg/m)[4,5]	w/cm[6]	Air Content %	Max. Slump (mm)	
							Before Adding SP	After Adding SP
HPC1	Bridge Deck, Barriers, Curbs, Median Substructures[1]	Silica Fume 7.5-10%[2]	20	370-400	0.35-0.37	5 to 8	70	180
	Sidewalks						70	100[7]
	Bridge Deck	Fly Ash up to 20% [3]						
HPC2	Overlays		14	370-400	0.35-0.37	5 to 8	70	180

[1] *Within splash zone*

[2] *By weight of cement*

[3] *Class F*

[4] *Type 10 or 20.*

[5] *The amount of cement shall be provided as required to achieve the durability and strength performance specifications, however, the Contractor is made aware of increased tendency of HPC with high cement content, to cracking. Lower dosage of cement within the specified range is encouraged.*

[6] *Water/ Cementitious Materials Ratio.*

[7] *Sidewalks concrete only*

.19 HPC specified performance characteristics shall be as shown in **Table B – Performance Characteristics.**

TABLE B – Performance Characteristics

Mix Type	Structure Element / Location	CSA A23.1 Exposure Condition	28-Day Compressive Strength (MPa)	Rapid Chloride Permeability (Coulombs)	Air Void Spacing (µm)
HPC1 HPC2	Bridge Deck, Sidewalk, Barriers, Curbs, Median Substructure-splash zones	C-1	45	Max. 1000[1]	250

[1] *Maximum limit. Target shall be set at lower permeability, i.e. 700 Coulombs to allow for variance due to potential inaccuracy of the Rapid Chloride Permeability test.*

2.9 Ready Mix Concrete

.1 In case of doubt as to the consistent quality of the concrete provided or to be provided by the proposed supplier, the Engineer, at his discretion, may order the Contractor not to use concrete on the work from such supplier. The Contractor shall arrange for an acceptable concrete supply without additional compensation or extension of time.

3.0 EXECUTION

3.1 General

.1 Perform concrete work, including fabrication, placement, finishing and curing in accordance with requirements of CSA-A23.1-00, unless indicated otherwise in this Specification, or on the Drawings.

.2 The HPC for a particular structure shall be produced in the same batching plant. If concrete is produced in a precast plant, the plant shall be certified as required in CAN/CSA -A 23.1 Standard.

.3 All aggregates for concrete produced for a structure shall be supplied from the same source.

.4 Not less than two (2) weeks prior to starting the work, submit to the Engineer for review, a complete description of the method and equipment proposed for the handling, placing, finishing, curing and protection of the concrete. Include the equipment for transporting, distributing and vibrating

the concrete; the concrete deck finisher and guide rails; finishing bridges and complete details for the support of such equipment. At the same time, submit a list of key personnel who will be working on placing and finishing of the concrete, with a brief resume of their experience. Standby plant and equipment must be available in case of breakdown and its use shall be only subject to approval by the Engineer. The review of the concrete placement plan will not relieve the Contractor of his responsibility for satisfactory performance of the final product.

.5 Selection of the equipment shall be based on site-specific requirements and constrains.

3.2 Placement and Finishing

.1 The Contractor is advised of the potential impact placement procedures have on the durability performance of the concrete, especially as it relates to concrete cracking. Special environmental conditions, procedures, monitoring, and products may be required to produce the quality of HPC in place expected on this project.

.2 Placement of HPC shall <u>not</u> commence if:

.1 The anticipated air temperature during the pour is expected to exceed 20˚C for placement of HPC on bridge decks or 22˚C for placement of HPC other than on bridge decks.

.2 The anticipated air temperature during the pour is expected to drop below 5˚C at the day of concrete placement and the next 7 days unless enclosure and heat are used or approved by the Engineer insulated forms capable of maintaining minimum 10ºC are used.

.3 Windy conditions are present or expected during the pour, whereby combined effects of air temperature, relative humidity, concrete temperature and wind could result in a surface moisture evaporation rate in excess of 0.75 kg/m^2 per hour as determined by the CSA A23.1-00 *Appendix D.*

.4 Rain is predicted for the time of concrete pour.

.5 All equipment, materials, wind breaks, fog spray equipment, water supply, and adequate manpower is available for continuous concrete pour.

.3 The temperature of the concrete during discharge into the forms shall be between 10˚C and 18˚C. The maximum temperatures during hydration shall not exceed 60˚C, total temperature gradients shall not exceed 20˚C,

and temperature rise or drop shall not exceed maximum heating/cooling rate of 2˚C/hr. Contractor shall record the concrete temperature at two different locations per each 100 m^2. Employ corrective measures upon identification of non-compliance to the concrete temperature requirements.

.4 The temperature of the mix shall be maintained below the 18˚C maximum temperature by the inclusion of ice or liquid nitrogen to the mix at the plant as reviewed by the Engineer, and as supervised by the testing laboratory. Special care shall be taken to maintain the consistency of the designed w/c ratio, while adjusting the mix proportions to account for addition of ice.

.5 In order to avoid moisture loss due to raising temperatures, HPC used for bridge decks shall be placed during the night time periods such that concrete may reach initial set before 10 A.M. or earlier, depending on the weather conditions. (Note: The above requirement applies to summer/hot weather conditions only, as determined by the Engineer).

.6 Comply with Hot/Cold Weather concrete fabrication, placement and curing requirements as per CSA-23.1.

.7 Immediately prior to placing concrete, the forms shall be thoroughly wetted down with clean potable water.

.8 Bridge Decks

.1 All deck concrete placing/finishing shall be with a Bidwell Model RF2000 OR Model 364 or Gomaco Model C450. Work bridges shall be installed to meet the requirements of this Specification.

.2 Concrete bridge decks receiving PMA wearing surface shall be placed/finished using the equipment specified in these Specifications, unless the Contractor can demonstrate to the Engineer's satisfaction, his ability to perform such work without the use of this equipment.

.3 The Contractor shall furnish and install finishing machine guide rails to suit the longitudinal and transverse profile of the deck with an allowance for the deflection of the structure as determined by the Engineer. Guide rails shall be adequately supported as recommended by the manufacturer of the finishing machine and shall be completely in place and firmly secured prior to placing of concrete. The support for these rails shall be fully adjustable (not shimmed) to obtain the correct profile and shall be placed outside the immediate area to be concreted. Do not treat rails with parting

compound to facilitate their removal. Extend the rails beyond both ends of the scheduled placement length for a distance that permits the finishing machine to reach all areas of the concrete placed. Ensure that the equipment can operate within the geometric constrains of the site.

.4 Rail anchorages to provide horizontal and vertical stability and shall not be ballistically shot into concrete unless that concrete is to be subsequently overlain. Submit plans for anchoring rails for the Engineer's review. No inserts will be permitted in the finished surface.

.5 After the rails have been set to proper grade and elevation, and prior to starting the concrete placement, check the clear distance from the bottom of the screed to the top of the prepared concrete surface formwork or reinforcing steel, in the presence of the Engineer.

.6 Attach a fill strip to the bottom of the screed during this check as a means of detecting any areas of where the required concrete overlay thickness might be compromised and to ensure that the minimum specified concrete cover to the top reinforcing steel can be achieved. Set up sufficient screed rails to allow the clearance check to be made in one continuous run for a complete day's overlay placement. Make corrections as directed by the Engineer so as to obtain the specified thickness or concrete cover.

.7 The finishing machine shall be capable of forward and reverse motion under the positive control. Provision shall be made for raising the screeds to clear the screeded surface for travelling in reverse.

.8 Prior to placing any concrete, the adjustment and operation of the finishing machine shall be verified by moving the machine over the full length of the section to be placed and traversing the float completely across all end bulkheads.

.9 Each riding surface shall be finished in one operation with a mechanical finishing machine spanning the full width of the pour. The method of finishing must be capable of producing a finished surface meeting the requirements of Clause 3.2.18, "Surface Defects and Tolerances". Hand finishing shall be kept to a minimum. Finishing bridges that span the full width of the pour shall be provided for all hand finishing operations.

.10 The vibratory screed shall be moved slowly at a uniform rate. A roll of concrete shall be maintained along the entire front of the screed at all times, to ensure the filling and consolidation of the surface concrete.

.11 Screeding shall be completed in no more than two passes. The screed vibrators shall not be allowed to run except when screeding is actually in progress. The screeded surface shall not be walked on or otherwise damaged.

.12 Cement grout that builds up in areas adjacent to edges which cannot be machine finished, shall be removed. The holes so caused and cavities left after removal of the machine guide rail shall be filled with concrete before the remainder of the concrete has reached final set and hand screeded and finished to conform with the machine finished concrete. The concrete surface shall be carefully finished around expansion joint block-outs and deck drains, and care shall be exercised to prevent any concrete from entering this area.

.13 During the placement and finishing operation the Contractor shall use fogging and an evaporation retarder. The Contractor shall mix and apply the material in accordance with the manufacturer's instructions, no later than 10 minutes after the longitudinal floating operation.

.14 Longitudinal Bull Floating:

The concrete surface produced behind the finishing machine shall be wood or magnesium floated the minimum amount necessary to produce a uniform surface, free from open texturing, plucked aggregate and local projections or depressions.

.15 Deck Sidewalk Finish:

Use evaporation retarder immediately after the deck sidewalk surface has been struck off with a strike board. Floated the surface with a wooden or cork float. Use an edging tool on edges and control joints. Remove edging tool marks prior to final finishing. The surface shall not vary more than 3 mm under a 3.6 m straight edge. The surface shall receive a light broom finish.

.16 Limitations of Operation

.1 If concrete placement is stopped or delayed for a period of 60 minutes or more, further placement shall be discontinued and may resume only after a period of not less than 12 hours. This restriction does not prohibit continuation of placement provided a gap is left in the lane or strip; the gap shall be sufficient in length for the finishing machine to clear the previously placed concrete.

.2 All vertical joints and cold joints between adjacent pours shall be prepared in accordance with CSA-A 32.1-00.

.17 Surface Defects and Tolerances

.1 The finished surface shall conform to the longitudinal and transverse profiles as indicated on the Drawings.

.2 The surface shall be free from open texturing, plucked aggregate and local projections.

.3 The surface shall be such that when tested with a 3 m long straight edge placed anywhere, in any direction, on the surface, there shall not be a gap greater than 3 mm between the bottom of the straight edge and the surface of the deck anywhere below the straight edge.

.4 The surface shall be checked as described above immediately after final bull floating.

.5 Surfaces that do not meet the required tolerances shall be corrected immediately.

3.3 Curing

.1 The Contractor shall employ special precautions following the placement and screeding of concrete but prior to wet curing, to protect HPC surfaces from the drying effects of wind and sun.

.2 Immediately following finishing of concrete, apply fog misting or use an evaporation retarder until the concrete has enough strength to support the placement of the wet burlap and plastic. Spray evaporation retarder on all unformed surfaces to coat them completely and uniformly, at dilution and application rate as recommended by the product manufacturer. The misting should not be used to apply water to the concrete's surface for

finishing purposes. The misting device should not be directed towards the concrete surface. Only a fine coating or sheen should be applied with the misting device.

.3 Unformed Surfaces

.1 Concrete shall be moist cured by protecting it against loss of moisture, freezing, rapid temperature changes, rain, flowing water and mechanical injury, for a period of not less than seven (7) days following its initial set. Curing shall consist of covering the concrete surface with white or light-colour wet burlap as soon as the concrete has set sufficiently to support the weight of burlap without excessive marking of the concrete surface. Exercise care to ensure that the burlap is thoroughly pre-soaked, but well drained. The burlap shall be cut up to sheets of the size that can be successfully handled off the work bridge or space outside the wet concrete. Other means of handling placement of burlap may be required to successfully place and maintain burlap in place.

.2 Failure to apply wet burlap within the required time shall be cause for rejecting the work so affected. Remove and replace surface concrete in the rejected area at no additional cost to the City.

.3 Once the burlap has been placed it shall be kept in a continuously wet condition and shall be covered with vapour-proof polyethylene clear or white sheeting. Air flow in the space between the moisture vapour barrier and the burlap must be prevented.

.4 Furnish both the burlap and vapour proof sheeting in pieces large enough to cover the entire width of the deck and lap at least 300 mm. Adequately weigh the top sheeting to prevent displacement or billowing. Maintain the integrity of the vapour sheeting at all times during the curing period and patch any damaged pieces immediately; to the satisfaction of the Engineer.

.5 Provide adequate equipment before placement of concrete begins to ensure that the burlap will be kept wet at all times during its use for curing. Burlap shall be clean and free of dust prior to pre-wetting.

.6 Supply water for curing as specified for the concrete.

.7 Regardless of ambient temperature, moist curing with burlap and water must be provided at all times. During cold weather, burlap must be prevented from freezing.

.4 Formed Surfaces

.1 Formed surfaces may be protected by watertight formwork left in place for 3 days.

.2 Formed surfaces may be stripped after concrete has attained sufficient strength (minimum 12 to 24 hours). Apply continual moist curing to formed concrete surfaces immediately after breaking forms away from the concrete surfaces and keep continuously and thoroughly wet. Total curing time (with and without forms) of formed surfaces shall be minimum seven (7) days.

.3 Remove side forms as soon as possible after concreting. In case of elements of significant length-to height ratio, such as retaining walls and traffic barriers, remove side forms within 12 hours after concreting. Apply continuous moist curing immediately.

.4 Where approved by the Engineer, a liquid curing compound applied at the rate recommended by the manufacturer may be applied. Curing compounds shall not be used on surfaces that are to receive sealers.
Formed surfaces may be stripped after concrete has attained sufficient strength (minimum 12 to 24 hours). Apply curing compound immediately after breaking forms away from the concrete surfaces.

3.4 Crack Repair

.1 Where a measured crack width in the bridge deck exceeds 0.2 mm, the following procedure shall be used in the treatment of the same:

.1 Blow out cracks clean and dry with a jet of oil-free compressed air.

.2 Seal cracks by a slow gravity feed of approved material to maximize the penetration.

.3 Seed surface with coarse sand.

3.5 Surface Texturing for Bridge Decks not Receiving PMA Wearing Surface

.1 Grooves shall be cut into the new concrete deck surface following the curing period. Grooving fresh concrete with a rake in place of cutting cured concrete will not be permitted.

.2 Grooves to be cut perpendicular to traffic flow.

.3 Saw cuts to be 2.5 mm wide, a minimum 6 mm deep and spaced 25 mm on centre.

.4 The area 600 mm from traffic barriers and curbs is not to be grooved.

.5 Saw cuts shall extend to within 100 mm of expansion joints and deck drains.

.6 The Contractor will supply all water.

.7 All run-off from grooving operations and suspended solids shall be collected at either end of the bridge off the bridge approaches or deck, in collection tanks, passed through several settling and filtration processes before it is discharged into the sewer system. The final effluent shall meet the requirements of local/provincial standards for water quality.

4.0 MEASUREMENT AND PAYMENT

4.1 Measurement

.1 When required, measurement of HPC will be by cubic metre.

4.2 Payment

.1 Payment for HPC will be by lump sum and will include all costs associated with mix designs, batch testing, evaluations, supply, delivery, placement, finishing, curing, protection and formwork.

4.3 Pay Adjustment

.1 Pay adjustments will be made for non-conformance to the specified strength and durability characteristics. When structural considerations do not govern, strength and durability penalties apply independently resulting in multiple penalties if the concrete is deficient in more than one consideration.

.2 The volume of concrete used to adjust the contract amount will be based on whole truckloads of concrete and will include all truckloads placed after a complying load up to and including the non-complying load to a maximum of 20 m^3 for any one test.

.3 When structural and durability considerations do not govern, but concrete fails to meet contractual obligations of strength, the penalty may be assessed at the discretion of the Engineer, in accordance with the following table:

Payment Adjustment for Low Strength Concrete	
3.5 MPa to 4.5 MPa below specified	\$70.00/m^3 deduction
> 4.5 MPa below specified	\$150.00/m^3 deduction or remove and replace.

.4 When the air content is tested with the prescribed procedure and falls outside the specified limits, a durability penalty will be assessed in accordance with the following table:

Payment Adjustment for Air Entrainment[1]	
Outside the specified range to a maximum of 0.2%	\$60.00/m^3 deduction
> 0.2% outside specified range	\$150.00/m^3 deduction or remove and replace.

[1] *Plastic concrete air content may be verified by air void characteristics determined on hardened concrete, subject to the approval of the Engineer. The cost of the verification testing shall be born by the Contractor.*

.5 A minimum of one air test for every 20 m^3 of concrete placed will be taken.

.6 The volume of concrete used to adjust the contract amount will be based on whole truckloads of concrete and will include all truckloads placed after a complying load up to and including the non-complying load to a maximum of 20 m^3 for any one air test.

.7 No pay adjustment will be made on the basis of cracking. However, the Contractor will be required to undertake the specified crack repair for all cracks greater than 0.2 mm, regardless of the nature of their cause.

.8 When concrete is tested for salt scaling potential and the results exceed the specified limits, payment adjustment will be made for the reduced durability as follows:

Payment Adjustment for Scaling Potential	
Less than 0.4 kg per 30 cycles	no deduction
> 0.4 kg per 30 cycles	$40/m^3 deduction or apply alternative protection system*

** At the discretion of the Engineer*

.9 HPC permeability will be measured by the Rapid Chloride Permeability Test, ASTM C1202-97, utilizing field cast and laboratory cured cylinders.

Permeability will be determined at the age of 28 days from time of placement.

Payment Adjustment for Permeability *	
Less than 1000 Coulombs	No deduction
1001 to 1200 Coulombs	$40.00/m^3 deduction
> 1201 Coulombs	$250.00/m^3 deduction or remove and replace at no cost to the City

** Permeability requirements may be verified, at the discretion of the Engineer, by other durability indicators.*

END OF SECTION

City of Winnipeg Specifications

CW 3310 - PORTLAND CEMENT CONCRETE PAVEMENT WORKS

TABLE OF CONTENTS

1. DESCRIPTION 1

2. DEFINITIONS 1
   - 2.1 Reinforced Concrete Pavement 1
   - 2.2 Plain-Dowelled Pavement 1
   - 2.3 Coarseness Factor 1

5. MATERIALS 1
   - 5.1 Handling and Storage of Materials 1
   - 5.2 Testing and Approval 2
   - 5.3 Portland Cement Concrete Constituent Materials 2
   - 5.4 Incidental Materials 4

6. DESIGN REQUIREMENTS 6
   - 6.1 Mix Design Statement 6
   - 6.2 Concrete Strength and Workability 8
   - 6.3 Restrictions on the Use of Fly Ash in Concrete 9
   - 6.4 Concrete for Early Opening of Pavements 9
   - 6.5 Plant Quality Control 9
   - 6.6 Concrete For Temporary Restoration of Utility Pavement Cuts 9

7. SUPPLY OF MATERIALS 9
   - 7.1 Concrete Supply 9

8. EQUIPMENT 10
   - 8.1 Ready Mixed Concrete Production Facilities 10
   - 8.2 Paving Equipment 10
   - 8.3 Paving Equipment Vibratory Devices 10
   - 8.4 Moveable Work Bridges 11
   - 8.5 Bull Floats 11

9. CONSTRUCTION METHODS 11
   - 9.1 Forms 11
   - 9.2 Placing Reinforcing Steel 11
   - 9.3 Joints 12
   - 9.4 Concrete Placement 13
   - 9.5 Concrete Finishing 14
   - 9.6 Concrete Curing 15
   - 9.7 Joint Sealing 15
   - 9.8 Weather Conditions 16
   - 9.9 Opening to Traffic 16

10. QUALITY CONTROL 16
    - 10.1 Concrete Quality 16
    - 10.2 Concrete Pavement Roughness 17
    - 10.3 Addition of Water and/or Air Entraining Admixture 17
    - 10.4 Acceptance Criteria 17

12. METHOD OF MEASUREMENT 18
12.1 Concrete Pavements, Median Slabs, Bull-noses and Safety Medians 18
12.2 Concrete Pavements for Early Opening 18
12.3 Concrete Curbs, Curb and Gutter, and Splash Strips 18
12.4 Dowel Assemblies 18
12.5 Tie Bars 18

13. BASIS OF PAYMENT 18
13.1 Concrete Pavements, Median Slabs, Bull-noses and Safety Median 18
13.2 Concrete Pavements for Early Opening 19
13.3 Pavement Thickness Tolerances 19
13.4 Concrete Curbs, Curb and Gutter, and Splash Strips 20
13.5 Dowel Assemblies 20
13.6 Drilled Tie Bars and Dowels 20

CW 3310 - PORTLAND CEMENT CONCRETE PAVEMENT WORKS

1. DESCRIPTION

CW 3310 shall cover the preparation of Portland Cement Concrete for, and all concreting operations relating to, the construction of Portland Cement Concrete pavements, curbs, gutters, private approaches, bull-noses, median slabs, median, safety median and boulevard splash strips, sidewalk and other related concrete works. This Specification is applicable to both reinforced and non-reinforced concrete construction, but not pre-stressed concrete.

The work to be done by the contractor under this Specification shall include the supply of all materials, and the furnishing of all superintendence, overhead, labour, equipment, tools, supplies and all other things necessary for and incidental to the satisfactory performance and completion of all work as hereinafter specified.

2. DEFINITIONS

2.1 Reinforced Concrete Pavement

A Portland Cement Concrete pavement with distributed steel reinforcement in the pavement slab and with deformed tie bars across longitudinal joints. Distributed steel reinforcement consists of smooth or deformed bars, with the longitudinal smooth dowels extended across the transverse contraction joints. Contraction joint spacing is typically 5 metres.

2.2 Plain-Dowelled Pavement

A Portland Cement Concrete pavement with no reinforcing steel in the pavement slab and with deformed tie bars across longitudinal joints and smooth dowels across transverse contraction joints. Contraction joint spacing is typically 5 metres.

2.3 Coarseness Factor

A measure of the coarseness of the combined aggregate materials being incorporated into the concrete mix, defined as the percentage of all plus 2 500 sieve particles, which are also retained on the 10 000 sieve.

Coarseness Factor = 100 (cumulative % retained on 10 000 Sieve divided by the cumulative % retained on 2 500 Sieve).

5. MATERIALS

5.1 Handling and Storage of Materials

Storage of materials shall be in accordance with the requirements of CSA-A23.1, Clause 9, Storage of Materials, except as otherwise specified herein.

5.2 Testing and Approval

All materials supplied under this Specification shall be subject to inspection and testing by a Testing Laboratory designated by the City of Winnipeg, Research and Standards Engineer or the Contract Administrator. There shall be no charge for any materials taken for testing purposes.

All materials shall conform to CSA-A23.1.

5.3 Portland Cement Concrete Constituent Materials

5.3.1 Aggregates

The Concrete Supplier shall provide in writing to the City of Winnipeg, Research and Standard Engineer, the location of the sources where aggregate will be obtained. Changes in the source of aggregate supply will not be permitted without approval of the City of Winnipeg, Research and Standards Engineer.

Aggregates shall conform to CSA-A23.1, Section 5, Aggregates. The following tests shall be conducted on each aggregate and the test results shall be provided with the mix design submittal.

Material	Parameter	Test Method	Specifications Limit	Frequency of Test
coarse aggregate	petrographic examination – PN	ASTM C295 MTO LS 609	130 max	1 year
	LA abrasion loss	CSA A23.2-16A	35% max	1 year
	unconfined freeze-thaw	CSA A23.2 24A	6% max	1 year
	Micro-Deval	CSA A23.2-29A	17% max	1 year
	clay lumps	CSA A23.2-3A	0.25% max	2 years
	low density granular material	CSA A23.2-4A	0.5% max	2 years
	alkali-silica reactivity	CSA A23.2-25A	0.15% max	2 years
fine aggregate	petrographic examination	ASTM C295	see note	1 year
	Micro-Deval	CSA A23.2-23A	20% max	1 year
	clay lumps	CSA A23.2-3A	1% max	2 years
	low density granular material	CSA A23.2-4A	0.5% max	2 years
	alkali-silica reactivity	CSA A23.2-25A	0.15% max	2 years
	organic impurities	CSA A23.2-7A	free from injurious amounts	2 years

NOTE:

The petrographic report for the fine aggregate shall include a comment on the suitability of the material for use in the production of concrete paving mix.

For concrete mix designs that will utilize two coarse aggregates and both coarse aggregates are from the same source, only the larger nominal maximum size coarse aggregate shall be tested for the parameters shown in the table above. If the coarse aggregates are from different sources, both materials shall be tested for the parameters shown in the table above.

The Coarseness Factor of the combined aggregate shall be between 45 and 65.

Quarried limestone and dolomite shall not be acceptable as aggregate materials.
The combined grading for the concrete aggregates shall comply with the following requirements:

TABLE 1
CW 3310-R6.1

TABLE 1 Design Combined Aggregate Gradation Limits		
Sieve Size	**Type 1 - All Portland Cement Concrete, except for Sidewalks**	**Type 2 - Portland Cement Concrete Sidewalks**
28 000	100%	100%
20 000	90% - 100%	90% - 100%
14 000	75% - 95%	75% - 95%
10 000	60% - 75%	60% - 75%
5 000	35% - 50%	35% - 55%
2 500	27% - 35%	27% - 40%
1 250	20% - 30%	20% - 35%
630	10% - 20%	10% - 20%
315	5% - 10%	5% - 10%
160	1% - 4%	1% - 4%
80	0% - 2%	0% - 2%

5.3.2 Cement

All cement shall be Type GU General Use Hydraulic conforming to the requirements of CSA A3001, Portland Cement. Cement shall be kept in weather tight storage that will protect it from moisture and contamination, and in such a manner as to permit inspection, sampling and identification, where required, of each lot.

Check tests of the cement may be undertaken by a Testing Laboratory designated by the City of Winnipeg, Research and Standards Engineer. Any cement which fails to comply with the requirements of CSA A3001 will be rejected, notwithstanding any certificate of acceptance that may have been previously given. Cement that has been rejected must be removed immediately by the Concrete Supplier.

5.3.3 Supplementary Cementing Materials

Fly ash for use in Portland Cement Concrete shall conform to the requirements of CSA A3001 for Class CI fly ash, except that the maximum allowable loss on ignition shall be three (3%) percent.

Fly ash shall be sampled and tested with copies of test results submitted to the City of Winnipeg, Research and Standards Engineer.

Fly ash shall be added to concrete mixtures as a separate constituent material. The use of blended hydraulic cement is not permitted.

5.3.4 Water

Water used for mixing concrete shall be clean and free from injurious amounts of oil, acid, alkali, organic matter or other deleterious substances. It shall be equal to potable water in physical and chemical properties.

5.3.5 Admixtures

No admixture, other than Air-Entraining Agent and Type WN Water-Reducing Agent shall be used without the written authorization of the City of Winnipeg, Research and Standards Engineer, unless otherwise specified in the Specifications for the Work.

a) Air-Entraining Admixture

The air-entraining admixture shall conform to the requirements of ASTM C260.

b) Chemical Admixtures

Chemical admixtures shall conform to the requirements of ASTM C494. Chloride-based chemical admixtures will not be permitted under any circumstances.

5.4 Incidental Materials

5.4.1 Hot Poured Joint Sealer

Hot poured joint sealer shall be low modulus Type IV Material Conforming to the requirements of ASTM Standard D 6690-01, Specification for Joint and Crack Sealants, Hot-poured, for Concrete and Asphalt Pavements.

Use only those materials listed as Approved Products for Surface Works. The Approved Products are available in Adobe Acrobat (.pdf) format at the City of Winnipeg, Corporate Finance, Material Management Internet site at: http://www.winnipeg.ca/matmgt/info.stm

5.4.2 Preformed Neoprene Compression Joint Seals

Use of preformed neoprene joint seals are subject to the approval of the Contract Administrator. Preformed neoprene compression joint seals are to be used on transverse joints only and are to be installed according to the manufacturer's recommendations. Preformed neoprene compression joint seals must meet ASTM Standard D2628.

5.4.3 Expansion / Isolation Joint Filler

a) Fibre Joint Filler

Fibre joint filler shall be rot-proof and of the preformed, non-extruding, resilient type made with a bituminous fibre and shall conform to the requirements of ASTM Standard D1751, Specification for Preformed Expansion Joint Fillers for Concrete Paving and Structural Construction.

b) Plastic Joint Filler

Plastic Expansion Joint Filler is to be the fluted polypropylene type and 6 mm in thickness.

5.4.4 Reinforcing Steel

Reinforcing steel shall be deemed to include all reinforcing bars, tie bars, dowel bars and bar mat reinforcement, including all bar accessories.

All reinforcing steel shall be supplied according to the type and dimensions as shown on the Contract Drawings or the Standard Details.

All reinforcing steel shall conform to the requirement of CSA Standard G30.12, Billet-Steel Bars for

Concrete Reinforcement. If, in the opinion of the Contract Administrator, any reinforcing steel provided for the concrete works exhibits flaws in manufacture or fabrication, such material shall be immediately removed from the site and replaced with acceptable reinforcing steel.

a) Bar Mat Reinforcement shall be Grade 300 bars with all bar intersections welded by an electric resistance spot welder, Welding shall be done in such a manner that the minimum requirements for tensile strength and yield point of the reinforcing steel shall be met when a specimen is tested across points of weld.

   Longitudinal bars shall be plain bars. Transverse bars may be plain bars or deformed bars.

   Bar mats with defective spot welds or with spot welds that have been broken while in transit, or during handling or placing operations, shall be replaced or repaired to the satisfaction of the Contract Administrator prior to installation.

b) Deformed Reinforcing Bars and Tie Bars shall be Grade 300 deformed bars.

c) Dowel Bars shall be Grade 300 plain bars.

d) Bar Accessories shall be of a type approved by the Contract Administrator.

All reinforcing steel shall be straight and free from paint, oil, mill scale and injurious defects. Rust, surface seams, or surface irregularities will not be cause for rejection provided that the minimum dimensions, cross-sectional area and tensile properties of a hand wire-brushed specimen are not less than the requirements of CSA Standard G30.12M.

5.4.5 Epoxy-Coating

For all new construction, or where specified; tie bars, dowels and stirrups (for separate curbs) shall be shop-coated with epoxy conforming to the requirements of ASTM Standard D3963. All bar ends shall be free of burs and distortions. All visible defects in the epoxy coating shall be field-coated with epoxy.

5.4.6 Liquid Membrane-Forming Curing Compound

Curing compound shall be Type 2, white-pigmented, and water based liquid membrane-forming curing compound conforming to the requirements of ASTM Standard C309.

5.4.7 Polyethylene Film

Polyethylene film shall be clear or white opaque and conform to the requirements of ASTM Standard C171.

5.4.8 Bonding Agent

Epoxy resin shall be of a type listed in the approved products list conforming to the requirements of ASTM Standard C881. Type 1, Grade 3 epoxy shall be used for bonding tie bars and dowels into hardened concrete.

Bonding agents for bonding tie bars and dowels into holes in hardened concrete other than epoxy resin may be permitted provided that they develop a minimum pullout resistance of 50 kN within two days (48 hours) after installation. Alternative bonding agents are listed in the approved products list.

5.4.9 Form Coating

Form coating shall be of a type approved by the Contract Administrator.

5.4.10 Evaporation Retardant

Evaporation retardant shall be water based, the monomolecular type and shall be applied in accordance with the manufacturer's recommendations.

If the evaporation retardant application film is broken by brooming, tinning or other finishing procedures, the application film shall be reapplied.

5.4.11 Backer Rod

Backer rod shall be Type 1, heat-resistant, round foam rod sized to approximately 25% larger than joint width so as to employ wall tension to allow backer rod installation at required depth in accordance with ASTM D5249.

Acceptable Products will be:

- HBR XL as manufactured by NOMACO Inc. supplied by Road Products Manitoba Inc.
- Hot Rod XL as manufactured by Industrial Thermo Polymers Limited supplied by Brock White Canada, Johnson Construction Materials and Wearing Williams Limited.

or an approved equal.

6. DESIGN REQUIREMENTS

6.1 Mix Design Statement

6.1.1 General

The City of Winnipeg, Research and Standards Engineer will maintain a list of approved concrete suppliers. All submissions to The City of Winnipeg, Research and Standards Engineer must include a cover letter. The cover letter will clearly outline the purpose of the submission in the first paragraph (i.e., initial, annual, revised). The second paragraph must include a list of the documentation attached to the submission along with comments on test data and any other information. The comments should indicate whether the materials comply with the requirements of CW 3310. Standard forms available from The City of Winnipeg, Research and Standards Engineer must be used when submitting the following information:

- Constituent material list (aggregates, cement, fly ash, admixtures, water)
- Aggregate test data
- Concrete mix design list

6.1.2 Initial Submission

To obtain approval, concrete suppliers must submit the following information to the Research and Standards Engineer:

- Names of suppliers and sources for aggregates, cement and fly ash
- Names of manufacturers and products for admixtures with letter certifying that the admixtures comply with the relevant ASTM standards
- Concrete mix designs with unique mix design codes signed and dated by person selecting the mix proportions
- Copy of MRMCA certificate for concrete batch plant
- Copies of most recent scale calibration reports for the concrete batch plant
- Test data for aggregates (in accordance with clause 5.3.1)
- Test reports for the cement and fly ash that are representative of the materials to be used during concrete production.

- A minimum of five (5) sets of concrete compressive strength tests for the hand placement paving (Type 1) mix with and without fly ash and the sidewalk (Type 2) mix with and without fly ash to demonstrate the concrete mix will achieve the required strength level. The strength test data may be obtained from either Quality Control testing during production or trial batches.
- Air-void parameters for the Type 1 slipform paving mix. If fly ash is to be used in the concrete mix, air-void parameters shall be submitted for the Type 1 slipform paving mix with and without fly ash. The concrete will be considered to have a satisfactory air-void system if the spacing factor does not exceed 260 µm. In no case shall the tests be more than twelve (12) months old.
- Sieve analysis test reports for the individual aggregates and the combined aggregate gradations to be used in the Portland Cement Concrete. The sieve analysis test reports shall be representative of the material to be used during concrete production.
- Quality control program for all constituent materials and concrete mix.

6.1.3 Annual Submission

If a concrete supplier is on the approved concrete suppliers list and there are no changes in the sources of constituent materials and the concrete mix designs, the following information must be submitted prior to January 1:

- List of suppliers and sources of constituent materials
- List of concrete mix designs with unique mix design codes
- Summary of Aggregate Test Results (in accordance with clause 5.3.1)
- Current scale calibrations
- Air-void parameters for the Type 1 slipform paving mix. If fly ash is to be used in the concrete mix, air-void parameters shall be submitted for the Type 1 slipform paving mix with and without fly ash.
- Quality control program for all constituent materials and concrete mix

Updates for aggregate test data and MRMCA certificates must be provided prior to their expiry date to ensure the concrete supplier is maintained on the approved concrete suppliers list.

6.1.4 Revised Submission

If a concrete supplier is on the approved concrete suppliers list and there are changes in sources of the constituent materials, concrete mix designs or concrete plants, the relevant information must be forwarded for review and approval in accordance with the initial submission requirements. The following information is required for any change in constituent materials (cement, fly ash, aggregate or admixtures):

- For cement, fly ash and aggregates, name of new supplier and source.
- For admixtures, name of new manufacturer and product with a letter certifying that the admixtures comply with the relevant ASTM standards.
- A minimum of five (5) sets of concrete compressive strength tests for the hand placement paving (Type 1) mix with fly ash to demonstrate the concrete mix will achieve the required strength level. The strength test data may be obtained from either Quality Control testing during production or trial batches.
- Air-void parameters for the Type 1 slipform paving mix. If fly ash is to be used in the concrete mix, air-void parameters shall be submitted for the paving mix with and without fly ash.

In addition, the following information shall be submitted:

- For a change in cement or fly ash, test reports from suppliers that are representative of the materials to be used during concrete production.
- For a change in aggregate, test data for aggregates (in accordance with clause 5.3.1) and sieve analysis test reports for the individual and combined aggregates gradations to be used in the concrete.
- For a modification to an existing batch plant, a copy of the new MRMCA certificate and new scale calibrations.

- For a new batch plant that will use the same constituent materials as an existing batch plant, a copy of the MRMCA certificate and scale calibrations. A test report on the quality of the mixing water shall also be submitted if the source is not the City of Winnipeg water supply.

Once the design gradation has been approved, allowable deviations in gradation shall be as follows:

TABLE 2
CW 3310 – R6.2

Allowable Deviation From The Job Mix Formula	
Sieve Size	**Deviation in % By Mass Passing Sieve**
20 000	± 3%
14 000	± 4%
10 000	± 5%
5 000	± 5%
2 500	± 4%
1 250	± 4%
630	± 3%
315	± 3%
160	± 2%
80	± 1%

Once approved, all concrete shall be supplied in accordance with this Mix Design Statement.

No changes in the concrete mix designs will be permitted without following the above procedure.

6.2 Concrete Strength and Workability

In accordance with CSA A23.1, Alternative (1) for specifying concrete, the concrete mix shall be proportioned such as to yield concrete having the required strength and workability, as follows:

a) Type 1 - Concrete for Pavements, Commercial Approaches, Curb and Gutter Sections, Curbs, Monolithic Curb and Sidewalks, Splash Strips and Bull-noses:

i. Class of Exposure: C-2
ii. Minimum Specified Compressive Strength @ 28 days = 32 MPa
iii. Minimum Cementitious Content = 340 kg/m^3
iv. Maximum Water/Cementitious Ratio = 0.45
v. Slump = 50 ± 20 mm (for slip form paving)
= 70 ± 20 mm (for hand placement)
vi. Aggregate Size = 20 mm Nominal Air Content = 5.0% to 8.0 %

b) Type 2 - Concrete for Sidewalks, Residential Approaches, Median Slabs and Other Related Concrete Works:

i. Minimum Specified Compressive Strength @ 28 days = 30 MPa
ii. Minimum Cementitious Content = 300 kg/m^3
iii. Maximum Water/Cement Ratio = 0.49
iv. Slump = 80 ± 20 mm
v. Aggregate Size = 20 mm Nominal
vi. Air Content = 5.0% to 8.0%

6.3 Restrictions on the Use of Fly Ash in Concrete

Class CI fly ash shall not replace Portland Cement by more than fifteen (15%) percent by mass of total cementitious content in the mix.

The use of fly ash as a partial replacement for Portland cement shall not be permitted between October 1 and May 15, unless authorized in writing by the City of Winnipeg, Research and Standards Engineer.

6.4 Concrete for Early Opening of Pavements

The Concrete Supplier shall modify the mix design, as required, in order to ensure that the minimum compressive strength of the concrete pavement is 20 MPa and is achieved within the following early opening requirements:

- 24 hours early opening after placement
- 72 hours early opening after placement

The Mix Design Statements for this concrete shall be submitted to the City of Winnipeg, Research and Standards Engineer for approval in accordance with Clause 6.1 of this Specification.

The requirements of Clause 6.2 shall also apply to concrete for early opening pavement.

6.5 Plant Quality Control

The Concrete Supplier shall provide quality control at the plant to ensure all materials meet the approved mix designs. The proposed quality control program shall be submitted with the Mix Design Statement for approval. This information shall be submitted weekly and will be monitored by the City of Winnipeg, Research and Standards Engineer.

6.6 Concrete For Temporary Restoration of Utility Pavement Cuts

The Concrete Supplier shall provide a mix design to be utilized for the temporary restoration of utility pavement cuts. The concrete placed shall be capable of supporting vehicular traffic loading within 24 hours of placement.

The concrete mix design shall satisfy the following in place compressive strength requirements:

- Minimum 15 MPa within 24 hours after placement
- Maximum 25 MPa at 28 days after placement

The mix design submission shall include modifications to accommodate placement and temperature conditions for year round usage.

The Mix Design Statement for this concrete shall be submitted to the City of Winnipeg, Research and Standards Engineer for approval in accordance with Clause 6.1 of this Specification.

7. SUPPLY OF MATERIALS

7.1 Concrete Supply

All concrete supplied for Portland Cement Concrete pavement works shall be supplied by a concrete supplier that has been approved by the city. A list of approved concrete suppliers will be maintained by the City of Winnipeg, Research and Standards Engineer.

Unless otherwise specified in the Specifications for the Work, the use of a ready-mixed concrete plant only will be permitted. Concrete shall be proportioned, mixed and delivered in accordance with the requirements of CSA A23.1, Clause 18, Production of Concrete, except that the transporting of ready-mixed concrete in non-agitating equipment is not permitted without the written permission of the Contract Administrator.

The discharge of ready-mixed concrete from the transit mixer shall be completed within 1½ hours after the introduction of the mixing water to the cement and aggregates, unless the Contract Administrator authorizes an extension of time.

Transit mixers supplying concrete under this specification shall have a MRMCA certification sticker affixed to the rear window of the driver's cab. All delivery tickets shall indicate the time of batching.

8. EQUIPMENT

8.1 Ready Mixed Concrete Production Facilities

Commercial ready-mixed concrete plants and batch plants supplying Portland Cement Concrete under this Specification shall be certified in accordance with the Manitoba Ready Mix Concrete Association's "Certification of Ready Mixed Concrete Production Facilities". Proof of certification shall be submitted with the Mix Design Statement.

Batch plants must be equipped with batch weight recorders and the results made available to the Contract Administrator upon request.

8.2 Paving Equipment

The Contractor shall use a self-propelled slip form paver with a minimum gross weight of 25 000 kg driven by an engine having a minimum 150 kW to construct pavements with widths between 5.0 m and 8.0 m.

The Contractor shall use a self-propelled slip form paver with a minimum gross weight of 15 000 kg and driven by an engine having a minimum 100 kW, to construct pavements with widths less than 5.0 m.

If a slip form paving machine is used for concrete placement, it shall be of a size and type adequate to handle the width and thickness of the concrete pavement to be constructed. The slip form paver shall distribute the fresh concrete evenly to the required grade without segregation and without disturbing the reinforcing steel. The concrete shall be thoroughly consolidated by means of vibrators, struck off to exact grade, and given a float finish, all automatically and continuously by the machine and with a minimum of hand finishing. The machine shall be equipped with automatic controls capable of controlling both the elevation and direction of the machine within a tolerance of 5 mm from the specified grade and alignment. Slip forms shall extend the full depth of the pavement and shall be of sufficient length that the concrete will not deform at the edges by the time the forms have passed.

If a slip form paver is not being used, the paving equipment used for placing concrete shall have a demonstrated ability to meet the specified tolerances for concrete pavement. The Contract Administrator shall reject any paving equipment should the paving equipment not field perform within the specified tolerances.

8.3 Paving Equipment Vibratory Devices

When called for by the Contract Specifications, the paving equipment vibratory devices shall be checked by the Contractor in the presence of the Contract Administrator, by use of a vibrating reed tachometer prior to commencement and during the paving operations.

Performance and checking of the vibrators shall conform to the paving equipment manufacturer's specifications.

8.4 Moveable Work Bridges

Where more than one lane is being paved at a time, two moveable work bridges independent of the paving machine shall be required, one for finishing and one for curing operations.

8.5 Bull Floats

Bull floats used for initial finishing of the in-place concrete pavement, shall be constructed of wood and shall be approved for use by the Contract Administrator prior to construction. The use of magnesium floats is not permitted.

9. CONSTRUCTION METHODS

9.1 Forms

Forms for concrete shall be constructed of steel or wood and shall be sufficiently rigid to prevent lateral or vertical distortion from the loading environment to which the forms will be subjected. All forms shall be set to the design grades, lines and radii as shown on the Drawings. Forms shall be adequately anchored and firmly set over bearing areas to prevent displacement during concrete placement. All formwork in place shall be subject to inspection and correction of grade and alignment prior to, and at any time during concrete placement.

The surfaces of all formwork to come in contact with the concrete shall be thoroughly cleaned and treated with form coating before concrete placement. The form coating shall be applied by brush or spray so as to give the forms an even coating without excess or drip, and shall not be allowed to get on any reinforcing steel. The form coating shall not cause a softening or permanent staining of the concrete surface and, further, it shall not impede the proper functioning of the curing compound. When concrete pavement is placed lane-at-a-time, the vertical surface of the previously placed lane should be treated as a side form. The vertical surface of the previously placed concrete lane should be treated with a form release coating to prevent bonding at the longitudinal joint.

Forms shall not be removed for a period of at least twenty-four (24) hours after the concrete placement has been completed. Removal of forms shall be done in a manner in order to avoid damage to, or spalling of, the concrete.

9.2 Placing Reinforcing Steel

9.2.1 Reinforced Concrete Pavement

All reinforcing steel shall be positioned as shown on the Drawings and shall be held in place by positive and satisfactory means so that the correct position of the reinforcing steel will be maintained after the concrete has been placed, vibrated and finished. If reinforcing steel is displaced during concrete placing operations, concrete placement shall cease and shall not resume until the displaced reinforcing steel has been reset to its true design position.

Field lap joints shall be securely wired or clipped. Splices, other than those shown on the Drawings or approved by the Contract Administrator, will not be permitted. Splices shall have a length sufficient to develop the full strength in bond of the bar and shall be well distributed and only located in areas of low tensile stress. Reinforcing steel shall be securely fastened at all laps, intersections and splices.

Longitudinal steel bars which cross transverse joints shall be aligned parallel to the centreline and surface of the slab with a maximum allowable tolerance of $\pm$ 6 mm from the transverse joint to the end of the bar.

Once all reinforcing steel is in position, it shall be inspected and approved by the Contract Administrator before any concrete is placed. Otherwise the concrete will be rejected by the Contract Administrator and shall be removed by the Contractor at his own expense.

9.2.2 Plain-Dowelled Concrete Pavement

Dowels shall be located at all transverse contraction joints by means of an approved dowel assembly positioned as shown on the drawings. The methods for fastening the dowel assembly to the base shall be subject to the approval of the Contract Administrator. The dowels shall be aligned parallel to the centreline and surface of the slab with a maximum allowable tolerance of ± 12 mm. The dowel assemblies shall be fabricated sufficiently rigid so the dowels are held in alignment within the specified tolerance, both horizontally and vertically, until the concrete placing and setting cycle is complete.

For dowel assemblies with side members and ties, the dowels shall be securely fastened at alternate ends to the side members to prevent any movement of the dowels.

All dowels shall be thoroughly coated at the site with a thin uniform coating of MC-250 cut-back asphalt or approved equal bond breaker for the length of the dowel. The bond breaker coating shall be smooth and free of voids.

The position of the dowel assembly shall be clearly marked by the Contractor on the forms or by stakes so that the location of the transverse joint can be accurately located for joint construction.

Tie bars shall be positioned as shown on the Drawings. They shall be placed at mid-depth of the pavement and parallel to the pavement surface and the transverse joints. The use of 90^0 bent tie bars will not be allowed.

If dowels or tie bars are displaced during concrete placing operations, concrete placement shall cease and shall not resume until the displaced dowels or tie bars have been reset to the true design position.

Once dowels and tie bars are in position, they shall be inspected and approved by the Contract Administrator before any concrete is placed. Otherwise the concrete will be rejected by the Contract Administrator and shall be removed by the Contractor at his own expense.

9.2.3 Tying Into Existing Pavement

Where the Drawings call for a new slab to be tied into an existing slab along a longitudinal joint, the Supplier shall install tie bars into the existing slab. Tie bars in drilled holes shall be installed and paid for in accordance with Specification CW 3230.

Where the Drawings call for a new slab to be tied into an existing slab along a transverse joint, the Supplier shall install dowels into the existing slab. Dowels in drilled holes shall be installed and paid for in accordance with Specification CW 3230.

9.3 Joints

Contraction, longitudinal and construction joints shall be constructed, where required, in accordance with the details shown on the Drawings or as directed by the Contract Administrator. The joints shall be vertical and shall not deviate more than 15 mm from the horizontal alignment shown on the Drawings. All joints in pavement slabs shall be continuous through the curbs, median slabs, bull-noses, safety medians and boulevard or median splash strips.

Expansion joints shall be constructed only where new concrete is being placed up against existing non-pavement structures, where directed by the Contract Administrator. A 15 mm thick fibre joint filler shall be installed in expansion joints. The fibre joint filler shall extend from the base of the concrete slab up to the concrete surface, but no higher.

Where concrete is to be placed against an existing pavement structure, the joint shall be constructed as shown on the Drawings, or as directed by the Contract Administrator.

The Contractor shall obtain the Contract Administrator's approval on all placement of reinforcing steel in odd shaped installations to ensure proper alignment with saw-cut joints.

Contraction joints shall be saw-cut in succession by a single cut, 3 mm wide to the depths and alignments as shown on the Drawings, as soon as the concrete is sufficiently hard so that it will not be ravelled or damaged by the blade. The time at which all such saw-cutting is to be undertaken shall be determined by the Contractor.

When construction joints are to be sealed; the joint must be second cut to a width and depth as shown on the drawings.

Longitudinal joints shall be saw-cut as per contraction joints. When sawing longitudinal joints, the Contractor shall ensure that any residue cleaned from the longitudinal joint does not go into the previously cleaned contraction joints. For lane-at-a-time paving only, the longitudinal joint may be constructed by initially depressing an approved tool into the plastic concrete or by installing a filler strip which shall remain in place until the concrete has attained it's initial set and shall then be removed without disturbing adjacent concrete. The joint shall then be saw-cut to the width of 3 mm and depth *as* shown on the Drawings*.* The longitudinal joints shall be second cut and filled with joint sealer as shown on the drawings.

For late in season construction, second cut shall not be completed if ambient temperature is below 4^0C. Second cut shall be completed the next season when temperature requirements can be met.

9.4 Concrete Placement

No concrete shall be placed until the Contract Administrator has examined and approved the layout of the forms, reinforcing steel, dowels, tie bars and joints and the condition and grade of the compacted base course.

The placing of concrete on a base course which is too wet or too dry, or which is frozen, will not be permitted. The prepared grade shall be sufficiently moist to prevent absorption of water from the freshly placed concrete, but must be free from mire or water pondage. The temperature of the fresh concrete shall not be less than 10.0°C nor greater than 30.0°C, as measured at time of placing.

Concrete shall be deposited as nearly as practicable to its final position in a rapid and continuous operation in such a manner as to require as little rehandling as possible and to avoid segregation and separation of the materials.

The sequence of concrete placement shall be arranged so that no concrete, which has partially hardened, will be subjected to injurious vibration or shock.

Concrete shall be placed while fresh and before it has taken its initial set. Retempering of partially hardened concrete with additional water will not be permitted.

The deposited concrete shall be spread by means of a mechanical spreader or by an approved hand method. The surface of the concrete shall then be struck off by mechanical means in a manner such that when the concrete is vibrated and screeded the finished concrete will conform to the cross-section and elevation shown on the Drawings.

In areas inaccessible to mechanical equipment, after the concrete has been vibrated, the surface of the concrete shall be struck-off manually with appropriate tools and in an approved manner so that the concrete will conform to the cross-section and elevation shown on the Drawings. Neat cement or mortar shall not be used to facilitate the finishing surfaces.

Mechanical vibrators only shall be used to consolidate the concrete. Spading, hand tamping, using puddling rods, or using other similar methods will not be permitted in place of vibration.

Vibration shall be applied at the point of deposit and in areas of freshly deposited concrete. Vibrators shall be inserted vertically into and withdrawn vertically out of the concrete slowly. Vibrations shall be of sufficient duration and intensity to thoroughly consolidate the concrete, but shall not be continued so as to cause segregation. Vibrators shall not be used for flowing the concrete or spreading it into place.

Concrete shall be worked thoroughly around any reinforcement, dowels, tie bars and around embedded fixtures and into the angles and corners of the forms. During placement, concrete shall be sufficiently vibrated with suitable equipment to ensure a secure bond with the reinforcement, dowels and tie bars, to eliminate entrapped air voids, and to ensure a homogeneous structure and adequate consolidation. Particular care shall be given to placing and vibrating the concrete along the faces of the forms to ensure a dense, smooth surface devoid of imperfections.

No persons shall be permitted to walk in the screeded concrete. Any remedial work shall be done from the sides of the concrete pour or from work bridges.

Once the placing and vibrating of the concrete has been completed, the forms shall not be jarred, and any projecting reinforcing steel shall not be disturbed, for a period of at least twenty-four (24) hours. At the end of a slip form paving pour, concrete shall be sawcut full-depth and removed. There shall be no measurement or pavement for the saw cutting, removal or concrete lost.

9.5 Concrete Finishing

Finishing shall be regulated in order that quality of the surface is not impaired by overworking or by bringing excessive fines and water to the surface. The use of steel trowels is not permitted.

Prior to final finishing, the surface grade of concrete slabs shall be checked to an accuracy of plus or minus 5 mm, with a rounded shape 3.0 metre long metal straight edge, unless otherwise specified in the Specifications for the Work. The straight edge shall be drawn across the pavement in a scraping motion to identify deviations for immediate correction. The straight edge shall be advanced one-half of its length for successive checks.

Where placement of the concrete pavement is facilitated by use of a slip form paving machine, additional floating of the surface by hand methods shall only be done if required to correct surface imperfections identified by checking with the 3.0 metre long metal straight edge, or as directed by the Contract Administrator.

When drying conditions are greater than or equal to 0.75 $kg/m^2/hr$ as estimated by use of Figure D1, Appendix D, Guidelines for Curing and Protection, of CSA A23.1, the plastic concrete surface shall be protected from drying by application of an evaporation retardant according to clause 5.4.10. The evaporation retardant shall be applied immediately after checking the surface with the 3.0 m long metal straight edge and shall be reapplied between finishing operations.

Following completion of floating operations, but prior to initial set of the concrete, the edges of all formed concrete slabs shall be carefully finished with an appropriate edging tool.

Upon completion of finishing operations, and when excessive moisture has evaporated, the plastic surface of the entire pavement shall be given a textured finish by means of broom finishing with a steel or fibre broom of a type approved by the Contract Administrator at right angles to the direction of traffic. Surface depressions introduced by the broom strands in the brooming operations shall not be more than 3 mm deep. Broom finishing will similarly be required for surfaces of private approaches, gutters, bull-nose slabs, boulevard and median slabs, and other related slabs. Broom finishing will not be required when the concrete does not form the finished surface.

When specified by the Contract Administrator, for pavements with high design speeds, the concrete surface shall be given a transverse tine texture. The finish shall be constructed by using a single transverse pass of an artificial turf or burlap followed by a transverse tine texturing device. The device shall consist of a single line of flat, slightly flexible, tempered steel tines, spaced 15 mm apart. The tine width shall be 3.2 mm. Texturing is to be applied while the concrete is still plastic enough to obtain a depth of at least 3.2 mm but not more than 6.4 mm. The tine texture shall be obtained by one continuous pass of the device for the full width of pavement being textured.

Where indicated in the Contract Specifications, the finished surface of the hardened concrete slabs shall be measured for roughness by the Contract Administrator. The roughness data will be reduced to an International Roughness Index, IRI. An acceptable IRI will be less than or equal to two (2), based on test sections approximately 100 metres long, measured along the wheel paths. No tests will be performed across designed grade breaks. Random testing by the City will be completed within 18 hours after the pavement has been placed. The Supplier will be informed of test results within 48 hours after the pavement has been placed. Sections of pavement that fail in roughness shall be corrected at the Contractor's expense to produce an acceptable IRI.

9.6 Concrete Curing

Immediately following concrete finishing and after any excess moisture due to bleeding has evaporated. The surface of the concrete shall be uniformly treated with a white-pigmented water based liquid membrane-forming curing compound, in accordance with the manufacturer's recommendations. The rate of application shall not be less than that recommended by the manufacturer. As soon as the side forms are stripped, the edges of all concrete slabs shall be sprayed white in the case of slip form paving, the edges shall be treated at the same time as the pavement surface.

After application, the white-pigmented liquid membrane-forming curing compound shall be protected as per the manufacturer's recommendations from rain or snow.

Curing compound shall not be used when the pavement is otherwise protected from cold weather by polyethylene film for a period of not less than five days.

9.7 Joint Sealing

The joints shall be thoroughly cleaned of all dirt, loose mortar particles and other foreign material lodged in the joints.

Joints and the pavement surface shall be cleaned of all residue left by the sawing operation. Initial cleaning shall be done by water jet having sufficient volume and pressure to remove the residue. Alternative methods of cleaning joints, must be approved by the Contract Administrator. The joint shall be blown out with an air jet having sufficient volume and pressure to remove the residue. Joints shall be allowed sufficient time to thoroughly dry before the application of the joint sealer.

Install backer rods immediately after cleaning and before sealant installation. Backer rods shall be inserted uniformly to the required depth to achieve the required shape factor. Backer rods shall be inserted using a double wheel steel roller and shall not be punctured or stretched during the installation process.

The joint shall then be filled with low modulus joint sealer to the depth shown on the Drawings using an approved mechanical pressure joint filling system. Overfilling of joints shall not be permitted. Overfilled joints shall have excess material removed to the satisfaction of the Contract Administrator. The joint must be surface dry at the time of filling, and the ambient temperature must be at least 4°C and rising.

Where Neoprene seals are used, Neoprene seals are to be installed in transverse concrete pavement joints only. All longitudinal joints are to be sealed in accordance with CW 3310. The seals are to be installed in accordance with the manufacturer's specifications. The seals shall be installed on the basis of a maximum joint spacing of 5000 mm. The joints shall be constructed in accordance with Standard Detail SD-212 for sawn joints, except that the reservoir cut shall be a minimum of 38 mm in depth.

9.8 Weather Conditions

The Contractor shall be responsible for taking all necessary measures to protect freshly laid concrete from adverse weather conditions, including hot weather, wind, rain, sleet, snow and cold weather, to the satisfaction of the Contract Administrator.

Concrete shall be adequately protected from freezing for a minimum of five (5) days after completion of placing operations, or longer as required to ensure that the pavement opening requirements of Clause 9.9 of this Specification are met. A minimum requirement for protection shall be provided as follows when the air temperature as forecast by Environment Canada is:

0°C to -3°C The concrete shall be covered with polyethylene film.

-3°C to -5°C Insulated tarp(s) or two sheets of polyethylene film covering, separated by 300 mm of dry straw.

Concrete damaged as a result of inadequate protection against weather conditions shall be removed and replaced by the Contractor at his own expense.

When air temperature is at or will be above 27°C during the basic curing period, curing shall be accomplished in accordance with the requirements of CSA A23.1.

9.9 Opening to Traffic

In no case shall traffic or construction equipment be allowed on the pavement until the concrete has reached a minimum compressive strength of 20 MPa, as determined by additional field cured cylinders.

If an early opening requirement is included in the Contract, a compressive strength of 20 MPa shall be attained within the specified opening time.

The Contract Administrator's decision as to when the pavement will be opened to traffic shall be final. Prior to opening to traffic, the pavement shall be swept clean.

10. QUALITY CONTROL

10.1 Concrete Quality

Quality control tests will be used to determine the acceptability of the concrete supplied.

The frequency and number of concrete quality control tests shall be in accordance with the requirements of CSA A23.1.

An outline of the quality control tests is as follows:

Slump tests shall be made in accordance with CSA A23.2-5C, Slump of Concrete. If the measured slump falls outside the limits specified in Clause 6 of this Specification, a second test shall be made.

In the event of a second failure, the Contract Administrator reserves the right to refuse the use of the batch of concrete represented.

Air content determinations shall be made in accordance with CSA A23.2-4C, Air Content of Plastic Concrete by the Pressure Method. If the measured air content falls outside the specified limits, a second test shall be made at any time within the specified discharge time limit for the mix. In the event of a second failure, the Contract Administrator reserves the right to reject the batch of concrete represented.

Samples of concrete for all slump, air, and strength tests shall be taken in accordance with CSA A23.2-1C, Sampling Plastic Concrete.

Test specimens shall be made and cured in accordance with CSA A23.2-3C, Making and Curing Concrete Compression and Flexure Test Specimens.

Compressive strength tests of concrete cylinders shall be conducted in accordance with CSA A23.2-9C. Compressive Strength of Cylindrical Concrete Specimens.

Compressive strength tests on specimens cured under the same conditions as the concrete works shall be made to check the strength of the concrete so as to determine if the pavement may be opened to traffic, and also to check the adequacy of curing and/or cold weather protection.
Where compressive strengths do not meet the specifications, the City shall require actions be taken in accordance with CSA A23.1. Cost of additional testing including core removal, core testing and repair of core holes shall be paid for by the contractor.

Where scaling of the concrete surface occurs during the Warranty Period, as determined by the Contract Administrator, the Contractor shall solely, at his expense, retexture the scaled areas by mechanical means acceptable to the Contract Administrator or replace the full thickness of pavement for those areas.

10.2 Concrete Pavement Roughness

As a basis for acceptance, the surface of the finished concrete pavement shall be checked with a 3 metre long metal straight edge and be within plus or minus 5 mm. Areas of pavement that do not meet these tolerances shall be corrected to the satisfaction of the Contract Administrator.

10.3 Addition of Water and/or Air Entraining Admixture

After initial mixing no water and/or air entraining admixture may be added except if, at the start of discharge the measured slump of the concrete or the measured air content of the concrete is less than that specified and no more than 60 minutes have elapsed from the time of batching to the start of discharge. Water added shall not exceed 12 litres per cubic metre as measured by an approved measuring device.

Air entraining admixture shall be added as required to meet specified allowable air content ranges. The mixer drum shall be turned a minimum of 30 revolutions at mixing speed and the slump and air content shall be retested.

10.4 Acceptance Criteria

Acceptance criteria for compressive strengths of laboratory cured cylinders shall conform to CSA A23.1.

12. METHOD OF MEASUREMENT

12.1 Concrete Pavements, Median Slabs, Bull-noses and Safety Medians

Construction of concrete pavements, median slabs, bull-noses and safety medians will be measured on a surface area basis. The surface area to be paid for shall be the total number of square metres constructed in accordance with this Specification and accepted by the Contract Administrator, as computed from measurements made by the Contract Administrator.

12.2 Concrete Pavements for Early Opening

Construction of concrete pavements for early opening will be measured on a surface area basis. The surface area to be paid for shall be the total number of square metres constructed in accordance with this Specification and accepted by the Contract Administrator, as computed from measurements made by the Contract Administrator.

12.3 Concrete Curbs, Curb and Gutter, and Splash Strips

Construction of concrete curbs, curb and gutter, and splash strips will be measured on a linear measure basis. The length to be paid for shall be the total number of metres constructed in accordance with this Specification and accepted by the Contract Administrator, as computed from measurements made by the Contract Administrator.

12.4 Dowel Assemblies

Supply and installation of dowel assemblies, including epoxy-coated dowels, will be measured on a linear measure basis. The length to be paid for shall be the total number of metres of transverse joints in which the dowel assemblies are supplied and installed in accordance with this Specification and accepted by the Contract Administrator, as computed from measurements made by the Contract Administrator.

12.5 Tie Bars

Supply and installation of tie bars, except for drilled tie bars, shall be incidental to the construction of Portland cement concrete pavements.

13. BASIS OF PAYMENT

13.1 Concrete Pavements, Median Slabs, Bull-noses and Safety Median

Construction of concrete pavements, median slabs, bull-noses and safety median will be paid for at the Contract Unit Price per square metre for the "Items of Work" listed here below, measured as specified herein, which price shall be payment in full for supplying all materials and performing all operations herein described and all other items incidental to the work included in this Specification. The unit price shall be reduced for deficiencies in pavement thickness as per Clause 13.3 of this Specification.

Items of Work:

i. "Construction of 250 mm Concrete Pavement (**)"
ii. "Construction of 230 mm Concrete Pavement (**)"
iii. "Construction of 200 mm Concrete Pavement (**)"
iv. "Construction of 150 mm Concrete Pavement (**)"
v. "Construction of Concrete Median Slabs (*)"
vi. "Construction of Monolithic Concrete Median Slabs (*)"
vii. "Construction of Concrete Safety Medians (*)"
viii. "Construction of Monolithic Curb and Sidewalk (*)"
ix. "Construction of Monolithic Concrete Bull-noses"

* Specify referenced Standard Detail
** Specify either Reinforced or Plain-Dowelled

13.2 Concrete Pavements for Early Opening

Construction of concrete pavements for early opening will be paid for at the Contract Unit Price per square metre for the "Items of Work" listed here below, measured as specified herein, which price shall be payment in full for supplying all materials and performing all operations herein described and all other items incidental to the work included in this Specification. The unit price shall be reduced for deficiencies in pavement thickness as per Clause 13.3 of this Specification.

Items of Work:

i. "Construction of 250 mm Concrete Pavement for Early Opening (*) (**)"
ii. "Construction of 230 mm Concrete Pavement for Early Opening (*) (**)"
iii. "Construction of 200 mm Concrete Pavement for Early Opening (*) (**)"
iv. "Construction of 150 mm Concrete Pavement for Early Opening (*) (**)"

* Specify either 24 hour or 72 hour
** Specify either Reinforced or Plain-Dowelled

13.3 Pavement Thickness Tolerances

At the option of the Contract Administrator, pavement thickness may be determined by coring pavement sections representing each day's pour and determining the pavement thickness by averaging the depth of the cores.

Pavement found deficient in thickness by more than five (5%) percent shall be paid for at the reduced price. The reduced price = P_R x contract price;

P_R is in % and T_D is in %

Where: $P_R = 100 - [(T_D - 5) / 5] \times 25$
Where: T_D = thickness deficiency greater than or equal to 5%, up to 10%.

When the pavement thickness is deficient by more than ten (10%) percent and the judgement of the Contract Administrator is that the area of such deficiency should not be removed and replaced, payment will be fifty (50%) percent of Contract Unit Price.

The cost of initial cores will not be paid for by the Contractor. Additional cores requested by the Contractor to determine the extent of areas deficient in thickness, shall be paid for by the Contractor.

13.4 Concrete Curbs, Curb and Gutter, and Splash Strips

Construction of concrete curbs, curb and gutter, and splash strips will be paid for at the Contract Unit Price per metre for the "Items of Work" listed here below, measured as specified herein, which price shall be payment in full for supplying all materials and performing all operations herein described and all other items incidental to the work included in this Specification.

Items of Work:

i. "Construction of Barrier Curb (*)"
ii. “Construction of Modified Barrier Curb (*)”
iii. “Construction of Curb and Gutter (*)”
iv. “Construction of Mountable Curb (*)”
v. “Construction of Lip Curb (*)”
vi. “Construction of Curb Ramp (*)”
vii. “Construction of Safety Curb (*)”
viii. “Construction of Splash Strips (*)”

* Specify height, type and Referenced Standard Detail

13.5 Dowel Assemblies

Supply and installation of dowel assemblies will be paid for at the Contract unit Price per metre for "Supply and Installation of Dowel Assemblies", measured as specified herein, which price shall be payment in full for supplying all materials and performing all operations herein described and all other items incidental to the work included in this Specification.

13.6 Drilled Tie Bars and Dowels

Supply and installation shall be in accordance with 9.2.4 of this Specification.

City of Ottawa Specifications

Specification currently being utilized by the City of Ottawa

Public Works and Services, which is predominantly transportation related, works utilizes Ontario Provincial Standard Specifications (OPSS). OPSS limits SCMs to 25% of the total cementing materials. There has been movement in the OPSS to utilize higher SCMs through increased use of CSA specifications and this is currently being reviewed by the City of Ottawa. There are some exceptions to this in that some of the High Performance Concrete HPC and sulphate resistant concrete applications utilize higher SCM contents. Most other works utilize CSA concrete specifications

Ontario
Provincial Specifications

NOTICE TO ALL USERS OF OPSS 1350

OPSS 1350 DATED NOVEMBER 2006 IS NOT APPLICABLE TO ONTARIO MINISTRY OF TRANSPORTATION CONTRACTS

FOR MTO CONTRACTS, OPSS 1350 DATED JANUARY 1995 CONTINUES TO BE APPLICABLE, UNLESS OTHERWISE SPECIFIED IN THE CONTRACT DOCUMENTS

OPSS 1350, NOVEMBER 2006, HAS BEEN DEVELOPED FOR USE IN MUNICIPAL CONTRACTS

This notice to users is not part of OPSS 1350.
2007-01-16

ONTARIO PROVINCIAL STANDARD SPECIFICATION

METRIC
OPSS 1350
NOVEMBER 2006

MATERIAL SPECIFICATION FOR CONCRETE - MATERIALS AND PRODUCTION

TABLE OF CONTENTS

1350.01	**SCOPE**
1350.02	**REFERENCES**
1350.03	**DEFINITIONS**
1350.04	**SUBMISSION AND DESIGN REQUIREMENTS**
1350.05	**MATERIALS**
1350.06	**EQUIPMENT**
1350.07	**PRODUCTION**
1350.08	**QUALITY ASSURANCE**
1350.09	**OWNER PURCHASE OF MATERIAL - Not Used**

APPENDICES

1350-A	**Commentary**

1350.01 SCOPE

This specification covers the requirements for materials; product supply pre-qualification; and mixing, transporting, and delivering concrete.

1350.01.01 Significance and Use of Appendices

Appendices do not form part of this specification unless invoked by the Owner.

Appendix 1350-A is a commentary appendix to provide designers with information on the use of the specification in a Contract.

1350.02 REFERENCES

This specification refers to the following standards, specifications, or publications:

Ontario Provincial Standard Specifications, Construction

OPSS 904 Concrete Structures

Ontario Provincial Standard Specifications, Material

OPSS 1001 Aggregates - General
OPSS 1002 Aggregates - Concrete
OPSS 1302 Water

Canadian Standards Association Standards

A23.1-04 Concrete Materials and Methods of Concrete Construction *
A23.2-3C Making and Curing Concrete Compression and Flexural Test Specimens *
A23.2-4C Air Content of Plastic Concrete by the Pressure Method *
A23.2-5C Slump and Slump Flow of Concrete *
A23.2-6C Density, Yield, and Cementing Materials Factor of Plastic Concrete *
A23.2-8C Flexural Strength of Concrete (Using a Simple Beam with Third-Point Loading) *
A23.2-9C Compressive Strength of Cylindrical Concrete Specimens *
A23.2-10C Accelerating the Curing of Concrete Cylinders and Determining Their Compressive Strength *
A23.2-13C Splitting Tensile Strength of Cylindrical Concrete Specimens *
A283-00 (R2004) Qualification Code for Concrete Testing Laboratories
A-3000-03 Cementitious Materials Compendium
* [Part of A23.1-04/A23.2-04 - Concrete Materials and Methods of Concrete Construction/Methods of Test and Standard Practices for Concrete]

ASTM International

C 157/C 157M-04 Standard Test Method for Length Change of Hardened Hydraulic-Cement, Mortar, and Concrete
C 260-01 Standard Specification for Air-Entraining Admixtures for Concrete
C 457-06 Standard Test Method for Microscopical Determination of Air Void Content and Parameters of the Air Void System in Hardened Concrete
C 494/C 494M-05a Standard Specification for Chemical Admixtures for Concrete
C 1017/C 1017M-03 Standard Specification for Chemical Admixtures for Use in Producing Flowing Concrete
C 1202-05 Standard Test Method for Electrical Indication of Concretes Ability to Resist Chloride Ion Penetration

Ready Mixed Concrete Association of Ontario Publications

R1025 Certificate of Ready Mixed Concrete Production Facilities
R1026 Certificate of Mobile Mix Concrete Production Facilities

1350.03 DEFINITIONS

For the purpose of this specification, the following definitions apply:

Agitator Truck means a vehicle in which freshly mixed concrete can be conveyed from the mixing site to the Work Area while being agitated. The containment vessel can either be stationary with an agitator or it can be mobile with a drum rotated continuously so as to agitate the concrete.

Cementing Material means hydraulic cement with or without a supplementary cementing material.

Confidentiality and Indemnity Agreement means a legal agreement between an Owner and the concrete supplier as obtained from the Municipal Engineers Association (MEA) or the Ready Mixed Concrete Association of Ontario (RMCAO).

Curing means the maintenance of a satisfactory moisture content and temperature in concrete for a period of time immediately following placing and finishing so that the desired concrete properties may develop.

High Volume Supplementary Cementing Materials (HVSCM) Concrete means concrete that contains a level of supplementary cementing materials above that typically used in construction.

Hot Weather means those conditions when the air temperature is at or above 28 °C. It is also considered to exist when the air temperature is likely to rise above 28 °C within 24 hours. Temperature refers to shade temperature.

Inspector means a representative of the Owner to which the concrete is being supplied.

Mobile Mix Concrete means concrete that is completely batched and mixed by a mobile mixer truck at the site.

Performance Criteria means requirements to be met as specified in the Contract Documents and as detailed in form OPSF 1350-1 or OPSF-2.

Portland Cement means the product obtained by pulverizing clinker consisting essentially of hydraulic calcium silicates to which calcium sulphate, limestone, water, and processing additions may be added at the option of the cement manufacturer.

Pre-Qualification Performance Criteria means requirements to be met as specified in the Contract Documents and as detailed in form OPSF 1350-1 or OPSF-2 and have been demonstrated through trial batches or concrete test data from a similar class of concrete as outlined in the Trail Batch clause.

Ready Mixed Concrete means concrete that is completely batched at the plant and completely mixed at the plant or while in transit.

Self-Consolidating Concrete (SCC) means a highly flowable, yet stable concrete that can spread readily into place, fill the formwork, and, if applicable, encapsulate the reinforcement without any mechanical consolidation and without undergoing any significant separation of material constituents.

Stationary Mixer means a non-mobile mixer installed at a plant for the purpose of mixing concrete.

Supplementary Cementing Material (SCM) means material that, when used in conjunction with hydraulic cement, contributes to the properties of the hardened concrete through hydraulic or pozzolanic activity or both.

Truck Mixer means a concrete mixer mounted on a truck or other vehicle used for the complete mixing of concrete materials after they have been batched at the plant.

Water-to-Cementing Materials Ratio (W/CM) means the ratio by mass of the amount of water to the total amount of cementing material in a freshly mixed batch of concrete or mortar, stated as a decimal. The amount of water does not include that absorbed by the aggregate.

1350.04 SUBMISSION AND DESIGN REQUIREMENTS

1350.04.01 Submission Requirements

Submissions for the performance or prescriptive specification alternative requirements shall be made based on the specification alternative specified in the Contract Documents.

1350.04.01.01 Performance Specification Alternative

In the case of the performance specification alternative, the Contractor shall be solely responsible for the design of the concrete and to ensure that the requirements of CSA A23.1 and this specification have been met.

At least 2 weeks prior to placing any concrete, the Contractor, in concert with the concrete supplier, shall:

a) Establish the concrete mix properties to meet performance criteria for plastic and hardened concrete, after considering the Contractor's criteria for construction and placement and the Owner's performance criteria.

b) Submit documentation demonstrating the Owner's pre-qualification performance criteria can be met.

c) Prepare, submit, and implement a quality control plan to ensure that the Owner's performance criteria can be met. When specified in the Contract Documents, submit documentation demonstrating that the Owner's performance requirements have been met.

d) Ensure that the concrete supplier submits the following to the Contractor to forward to the Owner.

   i.. Certification that the plant, equipment, and all materials to be used in the concrete comply with the requirements of this specification.
   ii. Certification that the mix design satisfies the requirements of this specification.
   iii. Certification that the production and delivery of concrete will meet the requirements of this specification.
   iv. Certification that the concrete complies with the specified performance criteria.

e) Provide documentation verifying that the concrete supplier's plant and equipment meet the plant certification requirements of the RMCAO Approved Quality Program.

1350.04.01.01.01 Performance Based Concrete Mix Data

At least two weeks prior to the delivery of concrete, the Contractor shall submit to the Owner, the attached form OPSF 1350-1 detailing the material and sources of materials to be used for each class of concrete. The form shall be completed for all concrete supplied to the project.

The quantity of chemical admixtures shall be at least the minimum dose specified in the Contract Documents. The Contractor may deviate from the specified minimum dose due to weather conditions and changes in materials. However, written notification of this change shall be provided to the Contract Administrator at least 24 hours prior to the delivery of the concrete by the Contractor.

1350.04.01.01.02 Mix Design Confidentiality and Indemnity Agreement

The Contractor shall ensure that the concrete supplier submits a confidential concrete mix design for the Contract to the Owner on the attached form OPSF 1350-2, when requested by the Contract Administrator, and only after a confidentiality agreement has been signed between the Owner and the concrete supplier.

At least two weeks prior to the placing of any concrete, the Owner and the concrete supplier shall execute a confidentiality agreement to cover the protection of proprietary mix proportion information that is to be released as part of form OPSF 1350-2.

1350.04.01.02 Prescriptive Specification Alternative

In the case of the prescriptive specification alternative, the Owner shall be solely responsible for the concrete mix design and to ensure that the requirements of CSA A23.1 and this specification have been met.

The Contractor, in concert with the concrete supplier, shall:

a) Plan the construction methods based on the Owner's mix proportions and parameters.

b) Obtain approval from the Owner for any deviations from the specified mix design or parameters.

c) Identify to the Owner any anticipated problems or deficiencies with the mix parameters related to construction.

d) Provide verification that the plant, equipment, and materials to be used in the concrete comply with the requirements of this standard.

e) Demonstrate that the concrete complies with the prescriptive criteria as supplied by the Owner.

1350.04.01.03 Ready Mixed Concrete Operation or Mobile Mix Concrete Operation

At least 1 week prior to the delivery of concrete to the Work Area, the Contractor shall submit to the Owner, a current, valid Certificate of Ready Mixed Concrete Production Facilities or a current, valid Certificate of Mobile Mix Concrete Production Facilities, for the plant being used to produce ready mixed concrete, issued under the Approved Quality Program as outlined in the publications, Certificate of Ready Mixed Concrete Production Facilities and Certificate of Mobile Mix Concrete Production Facilities.

1350.04.01.04 Concrete Delivery Ticket

The concrete supplier shall provide two copies of the delivery ticket to the Contractor immediately following unloading at the Work Area. The Contractor shall provide one copy of each delivery ticket to the Owner within 1 Business Day of completion of the placement. The concrete delivery ticket shall include:

a) Name and location of plant.

b) Date and serial number of the ticket.

c) Name of Contractor.

d) Specific designation of the job by name and location.

e) Specified class or designation of the concrete.

f) Volume of concrete.

g) Truck number and cumulative total or load number.

h) Time stamped when mixing of cement and aggregates commences.

i) Ordered slump or slump flow.

j) Time that the discharge of load was completed.

k) Amount of water added after batching, authorization, and units used.

l) Amount and type of admixtures added after batching.

1350.04.02 Design Requirements

1350.04.02.01 Mix Design Alterations

The Contractor may make minor alternations to the stated mix proportions, in order to maintain compliance with the overall performance requirements of the Contract. Such deviations shall be according to CSA A23.1.

A minimum of 24 hours notice of deviations in the mix design that alter the sources of supply or the fundamental characteristics of the mix shall be given to the Owner by the Contractor. Resubmission of form OPSF 1350-1 and, if applicable, form OPSF 1350-2, shall be made for such deviations.

1350.05 MATERIALS

1350.05.01 Materials for Concrete

1350.05.01.01 Cementing Materials

Cementing materials shall be according to CAN/CSA A3000.

Portland cement shall be used; however, a portion of it may be replaced by SCM. The SCM shall be ground granulated blast furnace slag, fly ash, or silica fume or any combination of two or all of the materials.

The mass of Portland cement and all SCMs contained in a concrete mix shall be indicated on form OPSF 1350-2, if applicable. Furthermore, the Contractor shall disclose on form OPSF 1350-1 and, if applicable, form OPSF 1350-2, when the mix design is classified as a HVSCM as specified in CSA A23.1.

HVSCM 1 concrete shall only be used with prior written approval of the Owner.

Neither slag nor fly ash shall be used for lean concrete base, unless trial mix tests are performed and the results show that the performance requirements of the Owner have been met.

1350.05.01.02 Aggregates

Aggregates shall be according to OPSS 1001 and OPSS 1002.

The maximum nominal size of the aggregate shall not exceed 19.0 mm.

1350.05.01.03 Water

Water for concrete shall be according to OPSS 1302 and CSA A23.1, clause 4.2.2.

1350.05.01.04 Air Entraining and Chemical Admixtures

Air entraining chemical admixtures shall be according to the ASTM C 260.

Chemical admixtures shall be according to ASTM C 494M or, when flowing concrete is specified, to ASTM C 1017M.

The Contractor shall ensure that the chemical admixtures to be used are compatible with each other, and that the performance of the concrete will not be negatively affected.

The Contractor shall use only chemical admixtures specified in the Contract Documents. Specialty chemical admixtures may be used when approved by the Owner.

1350.05.02 Performance Requirements for Concrete

1350.05.02.01 General

In instances where there are conflicts between this specification and other standards, the most stringent performance requirements shall apply.

1350.05.02.02 Exposure Classes of Concrete

Concrete having various exposure classifications shall meet the most stringent requirements of CSA A23.1, Tables 1, 2, and 3.

Classification A exposures do not apply to this specification.

1350.05.02.03 Compressive Strength

The concrete compressive strength shall be according to CSA A23.1, Tables 1, 2, and 3, and the Contract Documents.

1350.05.02.04 Air Content

The total air content of the concrete, measured with an air meter immediately prior to placing, shall be as shown CSA A23.1, Table 4. Nominal maximum sizes of coarse aggregate in CSA A23.1, Table 4, i.e., 10 mm, 14-20 mm, and 28-40 mm, shall be 9.5 mm, 13.2-19.0 mm, and 28-40 mm respectively.

Air content in hardened concrete shall meet the requirements of CSA A23.1, clauses 4.3.3.2 and 4.3.3.3, and the requirements of Table 3 of this specification.

1350.05.02.05 Slump or Slump Flow

Slump or slump flow shall be consistent with the placement and consolidation methods, equipment, and site conditions.

Slump requirements shall be identified and reviewed by the Contractor and concrete supplier prior to construction. The tolerances for concrete slump acceptance and rejection in the Work Area shall be as follows:

a) Slumps less than 80 mm - the maximum allowable variation shall be $\pm$ 20 mm.

b) Slumps between 80 to 180 mm - the maximum allowable variation shall be $\pm$ 30 mm.

c) Slumps greater than 180 mm - the maximum allowable variation shall be $\pm$ 40 mm.

d) For SCC, the maximum allowable variation shall be ± 70 mm from the slump specified in the mix design.

Slump or slump flow will be measured according to CSA A23.2-5C. Maximum slump for non-self-consolidating concrete shall be 240 mm, provided no segregation of the concrete occurs.

1350.05.02.06 Within Batch Uniformity of Concrete

The within-batch uniformity of concrete shall be tested according to OPSS 904, except uniformity shall be according to CSA A23.1, Table 13, rather than OPSS 904, Table 3.

1350.06 EQUIPMENT

1350.06.01 Batching Plant

The batching plant and equipment shall be according to the certification requirements of the RMCAO.

The batching plant shall have direct communication with the placement operation.

1350.06.02 Mixing Equipment

All mixers shall be according to the certification requirements of RMCAO and shall be capable of discharging the concrete so that the uniformity requirements of CSA A23.1, Table 13, are met.

1350.06.03 Non-Agitating Delivery Equipment

The concrete containment area of non-agitating delivery equipment shall be a smooth, watertight steel container equipped with gates that will permit control of the concrete discharge.

1350.07 PRODUCTION

1350.07.01 General

A manufacturer producing ready mixed concrete must possess a current, valid Certificate of Ready Mixed Concrete Production Facilities or a current, valid Certificate of Mobile Mix Concrete Production Facilities, for the plant being used to produce ready mixed concrete, issued under the Approved Quality Program as outlined in the publications, Certificate of Ready Mixed Concrete Production Facilities and Certificate of Mobile Mix Concrete Production Facilities.

The entire contents of the truck mixer shall be discharged before recharging. When any ingredient is added after initial batching, the volume of material in the drum shall not exceed the mixing capacity of the drum.

Proper facilities shall be provided to enable inspection of the quality of the materials used in the production of the concrete. The inspector shall be provided with all reasonable facilities for securing samples to determine whether the concrete and its materials are being supplied according to this specification. Owners wishing to obtain samples of the various raw materials from the concrete supplier shall provide advance notice to the concrete supplier and comply with all concrete supplier health and safety policies.

Where test results fail to meet the minimum requirements of this specification, and the Owner and the concrete supplier have already executed a confidentially agreement, the Contractor shall ensure that the batch records retained by the concrete supplier under the Approved Quality Program shall be made available to the Owner within 5 Business Days of a written request. The Owner shall treat these records in the same manner as form OPSF 1350-2 and they shall remain the confidential information of the concrete supplier.

1350.07.02 Temperature Control

The concrete temperature at the time of discharge from the truck shall be between 10 and 28 °C.

1350.07.03 Records and Reporting

In addition to the batch records required to conform to the Approved Quality Program, the Contractor shall record the following information on the concrete delivery tickets, when applicable:

a) The method used to control the temperature of the concrete during hot weather conditions.

b) The method used to extend the discharge time of the concrete beyond 1.5 hours after introduction of the mix water during hot weather conditions.

c) The type and quantity of any materials added to the concrete after leaving the batch plan, and the time that each material was added.

1350.07.04 Concrete Strengths 35 MPa or Greater

1350.07.04.01 Trial Batch

The mix properties for concrete with strengths of 35 MPa or greater shall be confirmed by the performance of a trial batch. The trail batch shall confirm all the performance properties identified for a particular class of concrete in CSA A23.1, Table 2, through the following tests:

a) Slump

b) Plastic air content

c) Compressive strength

d) Hardened Air Void System (AVS)

The testing of the field trial batch of concrete shall be the responsibility of the Contractor.

At least 30 Days prior to placing concrete with strengths of 35 MPa or greater, the Contractor shall mix a full size trial batch of concrete in the proportions stated in the mix design.

When the concrete is mixed within a truck mixer, the volume of the trial batch shall be the same as the volume of concrete normally mixed in the truck.

When the source of concrete is a ready mixed concrete plant, the trial batch of concrete shall originate from the primary plant to be used for the supply of the concrete and be delivered to the Work Area.

When the approved ready mixed concrete operation is currently supplying or has supplied a similar class of concrete within the last 6 months, permission may be given by the Owner to use concrete test data from that operation without the need for full size field trial batch, providing:

a) There is no change in the source of any material.

b) The performance characteristics of the aggregates have not changed significantly.

c) The concrete mix designated and previously used meets the specified performance requirements.

d) Documentation of this prior approval is submitted to the Owner.

1350.07.04.02 Early Compressive Strength Determination of Mix Design

When approved by the Owner, accelerated compressive strengths shown in Table 1 may be used to predict the 28-Day compressive strength of the proposed concrete mix.

The cylinders shall be tested according to CSA A23.2-10C using the autogenous curing test procedure.

1350.07.05 Ready Mixed Concrete

1350.07.05.01 Delivery of Ready Mixed Concrete

1350.07.05.01.01 General

The concrete shall be delivered to the Work Area without segregation in a thoroughly mixed and uniform mass and be discharged with the uniformity required in CSA A23.1, Table 13.

1350.07.05.01.02 Delivery by Non-Agitating Equipment

Concrete that is completely mixed in a stationary mixer may be transported in non-agitating equipment.

Covers shall be used to provide protection to the concrete during inclement weather.

Discharge of concrete shall be completed within 30 minutes of the introduction of the mixing water to the cement and aggregates.

1350.07.05.01.03 Delivery by Agitator or Mixer Trucks

After completion of mixing, concrete shall be transported to the Work Area by means of agitator trucks or truck mixers. The equipment shall be operated at the agitation speed of rotation designated by the manufacturers of the truck.

Discharge of the concrete shall be completed within 90 minutes after the introduction of mixing water to the cement and aggregates. This time may be extended using a set retarder, provided the Owner approves such use.

1350.07.05.01.03.01 Site Addition of Materials

When a truck mixer is used at agitating capacity, no adjustment shall be made to the load of concrete.

In the case of the performance specification alternative, only the concrete supplier, in concert with the Contractor, shall undertake the site addition of materials to the mixer.

When the measured slump or slump flow of the concrete is less than that specified in the mix design, water may be added by the concrete supplier, in concert with the Contractor, to bring the concrete up to the designated slump or slump flow provided the following criteria are met:

a) The specified water-to-cementing materials ratio is not exceeded.

b) No more than 60 minutes has elapsed from the time of batching.

c) Addition of water is only at the start of discharge, i.e., not more than 10% of the concrete has been discharged.

d) Not more than the lesser of 16 L/m^3 or 10% of the mixing water shall be added.

Air entraining admixture may be added to the load of concrete by the concrete supplier, in concert with the Contractor, prior to discharge, to increase the air content to that specified in the mix design. The use of detraining admixtures to lower the air content of concrete is prohibited.

When any material is added to the concrete, the concrete supplier shall thoroughly mix the load of concrete to meet the uniformity requirements of CSA A23.1, Table 13.

1350.08 QUALITY ASSURANCE

1350.08.01 General

The Owner shall be allowed access to all sampling locations and reserves the right to request a quality assurance (QA) sample at any time from the Contractor. The Contract Administrator may elect to carry out testing of the QA sample to ensure that material used in the Work is according to the requirements of this specification. Testing shall be carried out at a laboratory designated by the Owner. The Owner shall be responsible for all costs associated with QA testing.

Samples of aggregates, cementing materials, water, chemical admixtures, and air entraining admixtures representative of the materials to be used in the work shall be provided, when requested by the Owner.

1350.08.02 Sampling and Testing

1350.08.02.01 General

1350.08.02.01.01 Quality Assurance Testing Staff and Laboratory Requirements

Field tests to determine the performance characteristics of the concrete shall be performed at the Work Area by concrete technicians holding a Type J certification from the Canadian Council of Independent Laboratories (CCIL).

Until November 30, 2007, CSA and ACI certification will be accepted as an alternative to CCIL Type J certification.

Laboratory tests shall be completed by a laboratory certified according to CSA A283, for the category appropriate to the tests required, by an organization accredited by the Standards Council of Canada.

1350.08.02.01.02 Quality Assurance Test Reporting

Concrete test reports shall be immediately distributed electronically to the Owner, Contractor, and concrete supplier using CMATS™. The test results shall include the following information for each individual mix design:

a) Project identification.

b) A graphical representation of the specified and actual compressive strength data.

c) The average strength value for each age that the concrete is tested.

d) Average slump value for the mix design.

e) Average plastic air content for the mix design.

Testing shall be completed as shown in Table 2.

1350.08.02.02 Air Content in Hardened Concrete

The air void system in the hardened concrete may be performed on cast cylinder specimens. The air void system shall be tested according to ASTM C 457.

1350.08.02.03 Testing for Uniformity of Mixed Concrete

When required by the Owner, tests to determine the within-batch uniformity of mixed concrete shall be tested according to OPSS 904, except uniformity shall be according to CSA A23.1, Table 13, rather than OPSS 904, Table 3.

1350.08.02.04 Strength Tests and Requirements

1350.08.02.04.01 Compressive Strength

For the purpose of concrete acceptance on the basis of concrete strength, cylinders shall be made and cured according to CSA A23.2-3C, under standard moisture and temperature conditions, and tested according to CSA A23.2-9C.

A compressive strength test result is the average strength of two standard 100 x 200 mm or 150 x 300 mm concrete cylinders that are representative of concrete taken from one batch of concrete.

To conform to the specified nominal minimum 28-Day compressive strength requirements:

a) The average of all groups of three consecutive strength tests shall be equal to or greater than the specified strength.

b) No individual strength test shall be more than 3.5 MPa below the specified strength.

1350.08.02.04.02 Flexural Strength

Concrete for pavement and base shall meet the requirements for compressive strength and also flexural strength as stated here. The minimum flexural strength shall be 3.8 MPa at 10 Days.

A flexural strength test is the average of two breaks on a standard beam test specimen that is representative of concrete taken from one batch of concrete.

Flexural strength test beams shall be made and cured according to CSA A23.2-3C depending on the particular circumstances. The method of testing shall be according to CSA A23.2-8C.

Alternatively, a splitting tensile test may be carried out instead of the flexural strength test. One splitting tensile test shall be considered to be the average of two standard cylinders that are representative of concrete taken from one batch of concrete. The splitting tensile test cylinders shall be according to CSA A23.2-3C. The method of testing shall be according to CSA A23.2-13C. The minimum splitting tensile strength shall be 2.8 MPa at 10 Days.

To conform to the specified nominal minimum 10-Day strength requirements, the average of all sets of three consecutive strength tests shall be equal to or greater than the specified strength.

TABLE 1
2-Day Accelerated Compressive Strengths

Minimum 28-Day Compressive Strengths MPa	Corresponding 2-Day Accelerated Compressive Strengths MPa
20	8.4
25	12.9
30	17.4
35	21.9
40	26.4

TABLE 2
Quality Assurance Tests

Required Test	Test Method
Slump and slump flow of concrete	CSA A23.2-5C
Air content	CSA A23.2-4C
Compressive strength	CSA A23.2-3C and CSA A23.2-9C
Accelerating the cure of concrete cylinders and determining their compressive strength (accelerated cured)	CSA A23.2-10C
Yield	CSA A23.2-6C
Chloride ion penetrability test	ASTM C 1202
Linear shrinkage test	ASTM C 157M (Note 1)
Note: 1. Drying shall commence after 7 Days of wet curing.	

TABLE 3
Hardened Concrete Air Void System Requirements

Class of Exposure	Total Air Content %	Spacing Factor mm
C-XL, C1, C2, and F1	3.0 minimum	0.230 maximum mean 0.260 maximum individual
Concrete with water/cementing ratios of 0.36 or less	3.0 minimum	0.250 maximum mean 0.300 maximum individual

Concrete Mix Design Submission

Contract _____ Date Submitted _____

Location _____ Submitted To _____

Contractor _____ Contact _____

Batch Plants: Primary _____ Secondary _____

Concrete Supplier: Name _____

Address _____

City/Province _____

Telephone _____ Fax _____ Email _____

	MIX CODE				
	Application / Element / Location				
SPECIFICATION	**Structural Requirements**				
	- CSA Exposure Class				
	- Maximum W/CM				
	- Minimum Specified Strength, MPa @ Days				
	- Nominal Maximum Aggregate Size, mm				
	- HVSCM Type 1 or 2				
	- Plastic Air Content, %				
	Durability Requirements				
	- Exposure to Sulphate Attack				
	- Alkali Aggregate Reactivity				
	Architectural Requirements				
	- Colour / Texture				
	- Other				
CONTRACTOR REQUIREMENTS	**Rate, m^3/h**				
	Quantity, m^3				
	Slump Range, mm				
	Strength @ Age, MPa @ Days				
	Other				
	Specialty Information				
	- Concrete Set, **D**elay, **N**ormal, **A**ccelerated				
	Method of Placement				

MATERIALS SECTION	**Material**	**Source**
	Cement	
	SCM - Slag	
	SCM -	
	Water	
	Fine Agg.	
	Coarse	
	A.E.A.	
	W.R.	
	S.P.	

Form Submitted By:

Print Name: _____ **Signature:** _____ **Date:** _____

Contractor's Representative Receiving Form:

Print Name: _____ **Signature:** _____ **Date:** _____

OPSF 1350-1

CONFIDENTIAL - Concrete Mix Design Submission

Contract _____ Date Submitted _____

Location _____ Submitted To _____

Contractor _____ Contact _____

Batch Plants: Primary _____ Secondary _____

Concrete Supplier: Name _____

Address _____

City/Province _____

Telephone _____ Fax _____ Email _____

	MIX CODE				
	Application / Element / Location				
SPECIFICATION	**Structural Requirements**				
	- CSA Exposure Class				
	- Maximum W/CM				
	- Minimum Specified Strength, MPa @ Days				
	- Nominal Maximum Aggregate Size, mm				
	- HVSCM Type 1 or 2				
	- Plastic Air Content, %				
	Durability Requirements				
	- Exposure to Sulphate Attack				
	- Alkali Aggregate Reactivity				
	Architectural Requirements				
	- Colour / Texture				
	- Other				
CONTRACTOR REQUIREMENTS	**Rate, m^3/h**				
	Quantity, m^3				
	Slump Range, mm				
	Strength @ Age, MPa @ Days				
	Other				
	Specialty Information				
	- Concrete Set, **D**elay, **N**ormal, **A**ccelerated				
	Method of Placement				

	Material	**Source**	**Unit**	**Quantity**			
MATERIALS SECTION	Cement		kg/m^3				
	SCM – Slag		kg/m^3				
	SCM -		kg/m^3				
	Water		L/m^3				
	Fine Agg.						
	Coarse						
	A.E.A.		mL/100 kg				
	W.R.		mL/100 kg				
	S.P.		mL/100 kg				

Form Submitted By:

Print Name: _____ **Signature:** _____ **Date:** _____

Municipal Representative Receiving Form:

Print Name: _____ **Signature:** _____ **Date:** _____

OPSF 1350-2

Appendix 1350-A, Commentary for OPSS 1350, November 2006

Note: This appendix does not form part of the standard specification. It is intended to provide information to the designer on the use of this specification in a contract.

Designer Action/Considerations

This specification is intended for use by municipalities requiring ready mixed concrete.

The designer should specify the following in the Contract Documents:

- The Owner's choice of concrete specification alternatives, either Performance Specifications or Prescriptive Specifications. (1350.04.01)

- Minimum dose of chemical admixtures. (1350.04.01.01.01)

- Chemical admixtures. (1350.05.01.04)

The designer should determine if a quality control program is to be prepared and implemented. If so, the requirement for it should be specified in the Contract Documents. (1350.04.01.01)

The designer may consider the following and specify this requirement for air content in hardened concrete in the Contract Documents:

> "When the approved ready mixed concrete operation is currently supplying or has supplied a similar class of concrete within the last 6 months, permission may be given to waive this testing requirement, providing that:
>
> a) There is no change in the source of any material.
>
> b) The concrete mix designated and used previously meets the specified performance requirements.
>
> c) Documentation of this prior approval is submitted to the Owner."

CSA A23.1, Table 5, lists the alternative methods for specifying concrete. The designer should review this table when determining which concrete specification alternative is to be used in the Contract. CSA A23.1, Annex J, discusses the selection of alternatives for specifying concrete requirements. These alternatives include:

> **Performance** - When the Owner requires the concrete supplier to assume the responsibility for performance of the concrete as delivered and the Contractor to assume responsibility for the concrete in place.
>
> For this alternative, the Owner should specify the following in the Contract Documents:
>
> a) Required structural criteria including strength at age.
>
> b) Required durability criteria including class of exposure.
>
> c) Additional criteria for durability, volume stability, architectural requirements, sustainability, and any additional Owner performance, pre-qualification or verification criteria.
>
> d) Quality management requirements.
>
> e) Certification of the concrete supplier through the Approved Quality Program.

f) Any other properties that may be required to meet the Owner's performance requirements.

Prescriptive - When the Owner assumes responsibility for the performance of the concrete.

For this alternative, the Owner should specify the following in the Contract Documents:

a) Mix proportions, including the quantities of any or all materials (admixtures, aggregates, cementing materials, and water) by mass per cubic metre of concrete;

b) The range of air content;

c) The slump range;

d) Use of a concrete quality plan, if required;

e) Other requirements.

CSA A23.1, Annex K, discusses concrete made with a high volume of supplementary concreting materials (HVSCM).

The designer should ensure the Ontario Provincial Standards General Conditions of Contract and the 100 Series General Specifications are included in the Contract Documents.

Related Ontario Provincial Standards Drawings

None.

AMENDMENT TO OPSS 1301, SEPTEMBER 1996

OPSS 1301, September 1996, Material Specification for Cementing Materials is amended as follows:

1301.01 SCOPE

Section 1301.01 of OPSS 1301 is deleted and replaced by the following:

This specification covers the requirements for cementing materials together with the method of sampling, testing, delivery, handling and storage, prior to use.

The following types of cementing materials are covered by this specification:

Portland Cements

GU - General use hydraulic cement (formerly Type 10 Portland cement)
MS - Moderate sulphate-resistant cement (formerly Type 20 Portland cement)
MH - Moderate heat of hydration hydraulic cement (formerly Type 20 Portland cement)
HE - High early strength hydraulic cement (formerly Type 30 Portland cement)
LH - Low heat of hydration hydraulic cement (formerly Type 40 Portland cement)
HS - High sulphate resistant hydraulic cement (formerly Type 50 Portland cement)

Blended Hydraulic Cements

GUb - Blended general use hydraulic cement (formerly Type 10E blended hydraulic cement)
MSb - Blended moderate sulphate-resistant cement (formerly Type 20E blended hydraulic cement)
MHb - Blended moderate heat of hydration hydraulic cement (formerly Type 20E blended hydraulic cement)
HEb - Blended high early strength hydraulic cement (formerly Type 30E blended hydraulic cement)
LHb - Blended low heat of hydration hydraulic cement (formerly Type 40E blended hydraulic cement)
HSb - Blended high sulphate resistant hydraulic cement (formerly Type 50E blended hydraulic cement)

Supplementary Cementing Materials

Slag - Ground granulated blast furnace slag, Type S

Fly ash – the finely divided residue that results from the combustion of pulverized coal or a combination of pulverized coal blended with up to 30% by mass of petroleum coke and that is carried from the combustion chamber of a furnace by exhaust gases, Types F, CI or CH.

Silica Fume – the finely divided residue, resulting from the production of silicon or ferrosilicon alloys, that is carried from the burning area of a furnace by exhaust gases. The silica fume shall contain a minimum of 80% SiO_2.

1301.02 REFERENCES

Section 1301.02 of OPSS 1301 is deleted and replaced by the following:

This specification refers to the following standards, specifications or publications:

Canadian Standards Association Standards:

CAN/CSA A3000-03 Cementitious Materials Compendium

1301.04 SUBMISSION AND DESIGN REQUIREMENTS

1301.04.01.01 Product Data

Clause 1301.04.01.01 of OPSS 1301 is amended by deletion of point a. and replacing it with the following:

a. A test certificate from a laboratory, qualified according to the Materials Section, showing compliance of the cementing material with all the physical and chemical test requirements of CAN/CSA A3000, including the additional requirements of this specification and the optional test for false set if the product is Portland cement.

1301.05 MATERIALS

1301.05.01 Physical and Chemical Requirements

Clause 1301.05.01of OPSS 1301 is amended by deletion of first and third paragraph and replacing it with the following:

Cementing materials shall conform to the physical and chemical requirements of CAN/CSA A3000. Fly ash, slag and silica fume shall also conform to the optional requirements of CAN/CSA A3000 with the exception of the requirements for “Control of Expansion Due to Alkali-Silica Reactivity”.

Where Portland cement is required to be certified as being free from early stiffening tendencies, the penetration shall be 50% or greater when determined by the method specified in the Annex A of CAN/CSA A3000.

WARRANT: All contracts with concrete.

ONTARIO PROVINCIAL STANDARD SPECIFICATION

METRIC
OPSS 1820
NOVEMBER 2005

MATERIAL SPECIFICATION FOR CIRCULAR CONCRETE PIPE

TABLE OF CONTENTS

1820.01	**SCOPE**
1820.02	**REFERENCES**
1820.03	**DEFINITIONS - Not Used**
1820.04	**SUBMISSION AND DESIGN REQUIREMENTS**
1820.05	**MATERIALS**
1820.06	**EQUIPMENT - Not Used**
1820.07	**PRODUCTION**
1820.08	**QUALITY ASSURANCE - Not Used**
1820.09	**OWNER PURCHASE OF MATERIAL**

APPENDICES

1820-A	**Commentary**

1820.01 SCOPE

This specification covers the requirements for reinforced and non-reinforced non-pressure circular concrete pipe with rubber gasket joints.

1820.01.01 Significance and Use of Appendices

Appendices are not a mandatory part of the specification unless invoked by the Owner.

Appendix 1820-A is a commentary appendix to provide designers with information on the use of the specification in a Contract.

1820.02 REFERENCES

This specification refers to the following standards, specifications, or publications:

Canadian Standards Association

A257.1-03	Non-Reinforced Circular Concrete Culvert, Storm Drain, Sewer Pipe, and Fittings [Part of A257 Series-03, Standards for Concrete Pipe and Manhole Sections]
A257.2-03	Reinforced Circular Concrete Culvert, Storm Drain, Sewer Pipe, and Fittings [Part of A257 Series-03, Standards for Concrete Pipe and Manhole Sections]
A257.3-03	Joints for Circular Concrete Sewer and Culvert Pipe, Manhole Sections, and Fittings Using Rubber Gaskets [Part of A257 Series-03, Standards for Concrete Pipe and Manhole Sections]
A3000-03	Cementitious Materials Compendium

Plant Prequalification Program Publication

Prequalification Requirements for Precast Concrete Drainage Products

1820.04 SUBMISSION AND DESIGN REQUIREMENTS

1820.04.01 Design Requirements

1820.04.01.01 Concrete Pipe

Non-reinforced concrete pipe shall be according to CAN/CSA A257.1.

Reinforced concrete pipe shall be according to CAN/CSA A257.2.

1820.04.01.02 Joints and Gaskets

Joints and gaskets shall be according to CAN/CSA A257.3.

1820.04.01.03 Jacking Pipe

Jacking pipe shall be according to CAN/CSA A257.2 with a minimum class of 65-D.

Jacking pipe shall contain two cages of circular reinforcement in the barrel of the pipe. The outer cage shall extend into the bell of the pipe and the inner cage into the spigot of the pipe. Elliptical reinforcement in the barrel of the pipe is not permitted for jacking pipe.

1820.04.01.04 Elliptical Reinforcing and Lift Holes

Elliptical reinforcing and lift holes are not permitted for pipes up to and including 900 mm nominal internal diameter.

1820.05 MATERIALS

1820.05.01 Cement

Cement shall be Portland cement Type GU or blended cements Type GUb, i.e., Portland blast-furnace slag cement and Portland fly ash cement. Ground granulated blast-furnace slag or fly ash may also be added separately to Type GU Portland cement. Whether added separately or in the form of blended cement, ground granulated blast furnace slag shall constitute not more than 70% by mass of the total cementing material and fly ash shall constitute not more than 40% by mass of the total cementing materials.

Portland cement Type GU, blended cements Type GUb, ground granulated blast furnace slag, and fly ash shall be according to CAN/CSA A3000.

1820.07 PRODUCTION

1820.07.01 General

A manufacturer producing circular concrete pipe must possess a current Prequalification Certificate, issued under the Plant Prequalification Program as outlined in the publication, Prequalification Requirements for Precast Concrete Drainage Products.

1820.07.02 Markings

Markings shall be according to CAN/CSA A257.2. In addition, pipes shall be marked with the Prequalification Stamp as outlined in the publication, Prequalification Requirements for Precast Concrete Drainage Products.

1820.09 OWNER PURCHASE OF MATERIAL

1820.09.01 Measurement and Payment

Circular concrete pipe shall be measured in metres along the length of the pipe.

Payment at the price specified in the purchasing order shall be for the supply and delivery of the circular concrete pipe including gaskets to the destination and at the date and time specified.

The cost of all testing, except that performed in the Owner's laboratory, shall be included in the price.

Appendix 1820-A, Commentary for OPSS 1820, November 2005

Note: This appendix does not form part of the standard specification. It is intended to provide information to the designer on the use of this specification in a Contract.

Designer Action/Considerations

The designer should ensure that the Ontario Provincial Standards General Conditions of Contract and the 100 Series General Specifications are included in the Contract Documents.

Related Ontario Provincial Standard Drawings

OPSD 802.030	Rigid Pipe Bedding, Cover, and Backfill, Type 1 or 2 Soil - Earth Excavation
OPSD 802.031	Rigid Pipe Bedding, Cover, and Backfill, Type 3 Soil - Earth Excavation
OPSD 802.032	Rigid Pipe Bedding, Cover, and Backfill, Type 4 Soil - Earth Excavation
OPSD 802.033	Rigid Pipe Bedding, Cover, and Backfill, Rock Excavation
OPSD 802.034	Rigid Pipe Bedding and Cover in Embankment, Original Ground: Earth or Rock
OPSD 807.01	Specified Minimum Class of Pipe, Reinforced Concrete Pipe - Confined Trench, Class: 50-D; 65-D; 100-D; 140-D
OPSD 807.03	Specified Minimum Class of Pipe, Reinforced Concrete Pipe - Embankment, Class: 50-D; 65-D; 100-D; 140-D
OPSD 807.040	Height of Fill Table, Non-Reinforced Concrete, Pipe Class 3

ONTARIO PROVINCIAL STANDARD SPECIFICATION

METRIC
OPSS 1351
November 2004

MATERIAL SPECIFICATION FOR PRECAST REINFORCED CONCRETE COMPONENTS FOR MAINTENANCE HOLES, CATCH BASINS, DITCH INLETS, AND VALVE CHAMBERS

TABLE OF CONTENTS

1351.01 SCOPE

1351.02 REFERENCES

1351.03 DEFINITIONS

1351.04 SUBMISSION AND DESIGN REQUIREMENTS

1351.05 MATERIALS

1351.06 EQUIPMENT - Not Used

1351.07 PRODUCTION

1351.08 QUALITY ASSURANCE

1351.09 OWNER PURCHASE OF MATERIAL

APPENDICES

1351-A Commentary

1351.01 SCOPE

This specification covers the requirements for precast reinforced concrete components for the construction of maintenance holes, catch basins, ditch inlets, and valve chambers, maintenance hole steps, and aluminum safety platforms.

1351.01.01 Significance and Use of Appendices

Appendices are not a mandatory part of this specification unless invoked by the Owner.

Appendix 1351-A is a commentary appendix to provide designers with information on the use of the specification in a Contract.

1351.02 REFERENCES

This specification refers to the following standards, specifications or publications:

Ontario Provincial Standard Specifications, Materials

OPSS 1002	Aggregates - Concrete
OPSS 1301	Cementing Materials
OPSS 1302	Water
OPSS 1303	Air Entraining and Chemical Admixtures for Concrete
OPSS 1315	White Pigmented Curing Compounds for Concrete
OPSS 1350	Concrete - Materials and Production
OPSS 1440	Steel Reinforcement for Concrete

Ministry of Transportation Publications

MTO Laboratory Testing Manual:
LS-412 Scaling Resistance of Concrete Surfaces Exposed to Deicing Chemicals

Structural Manual:
Division 1, Exceptions to the Canadian Highway Bridge Design Code

Canadian Standards Association

A23.1-00	Concrete Materials and Methods of Concrete Construction [Part of CAN/CSA-A23.1-00/A23.2-00, Concrete Materials and Methods of Concrete Construction/Method of Test for Concrete]
A257.3-03	Joints for Circular Concrete Sewer and Culvert Pipe, Manhole Sections, and Fittings using Rubber Gaskets [Part of A257 Series-03, Standards for Concrete Pipe and Manhole Sections]
A257.4-03	Precast Reinforced Circular Concrete Manhole Sections, Catch Basins, and Fittings [Part of A257 Series-03, Standards for Concrete Pipe and Manhole Sections]
A3000-03	Cementitious Materials Compendium
S6-00	Canadian Highway Bridge Design Code
S157-M83 (R2002)	Strength Design in Aluminum

ASTM International

B 221-96 Aluminum and Aluminum-Alloy Extruded Bars, Rods, Wire, Profiles, and Tubes

Canadian Food and Drug Act and Regulations

Division 23

United States Federal Specifications

United States Code of Federal Regulations, Section 177.1520 (Olefin Polymers)

SS-S-210A Sealing Compound Preformed Plastic for Pipe Joints

Plant Prequalification Program Publication

Prequalification Requirements for Precast Concrete Drainage Products

1351.03 DEFINITIONS

For the purpose of this specification, the following definitions apply:

Engineer means a professional engineer licensed by the Professional Engineers of Ontario to practice in the Province of Ontario.

Hoop Steel means a continuous ring of deformed steel wire reinforcement.

1351.04 SUBMISSION AND DESIGN REQUIREMENTS

1351.04.01 Submission Requirements

1351.04.01.01 Special Design Drawings

When the Contract Documents do not include Drawings for precast reinforced concrete components, 2 copies of detailed structural design drawings of the components shall be supplied to the Owner for review. Details of precast concrete adjustment units, maintenance hole steps, and the name of the step manufacturer shall also be included.

Detailed structural design drawings shall bear the seals and signatures of the design and checking Engineers.

1351.04.02 Design Requirements

1351.04.02.01 Circular Maintenance Holes, Catch Basins, Ditch Inlets, and Valve Chambers

Circular precast concrete components shall be designed according to CSA A257.4, CAN/CSA-S6, and the Structural Manual, Division 1.

1351.04.02.02 Square or Rectangular Maintenance Holes, Catch Basins, Ditch Inlets, and Valve Chambers

Square or rectangular precast maintenance holes, catch basins, ditch inlets, and valve chambers shall be designed according to CAN/CSA-S6 and the Structural Manual, Division 1.

1351.04.02.03 Precast Concrete Adjustment Units

Precast concrete adjustment units shall be designed according to CSA A257.4.

1351.04.02.04 Steps

Steps that are cast, mortared, or attached by mechanical means into the walls of risers or tapered top sections shall be designed according to CSA A257.4 except that:

a) The steps shall be evenly spaced at a distance of 300 mm centre to centre.

b) The steps shall be located a minimum of 150 mm from the ends of the sections.

c) The clearance between the wall face and the centre of the inside surface of the step shall not be less than 150 mm.

1351.04.02.05 Aluminum Safety Platforms

Aluminum safety platforms shall be designed according to CAN3-S157-M.

1351.04.02.06 Joints

Joints shall be designed as to be formed by a male end of a precast concrete section joining with a female end on the adjoining section.

All joints of precast concrete sanitary sewer maintenance holes and valve chambers shall be provided with a joint seal system which shall be the sole element depended upon to make the joint watertight.

Joints shall be of such a design that when joined they will withstand, without cracking and fracturing, the forces caused by the compression of the joint seal system, and any stresses resulting from the hydrostatic test specified in this specification.

1351.04.02.07 Precast Base Slabs and Monolithic Base Sections

Structural design, including minimum reinforcing steel requirements, shall be based on worst condition installation for standard precast maintenance hole bases. Live load, dead load, hydrostatic uplift, and other possible forces shall be considered for a burial depth of 10 m. Depth of bury is to be measured from grate elevation at the top of the precast maintenance hole to the top of its base. Where greater depth of bury is required, a specially designed base shall be used.

1351.04.02.08 Precast Transition Slabs

Structural design, including minimum reinforcing steel requirements, shall be based on worst condition installation for standard precast maintenance hole transition slabs. Live load, dead load, hydrostatic uplift, and other possible forces shall be considered for a burial depth of:

a) 10 m for tapered transition slabs and transition slabs 1500 mm to 2400 mm in diameter;

b) 8 m for transition slabs greater than 2400 mm in diameter.

Depth of bury is to be measured from grate elevation at the top of the precast maintenance hole to the top of its transition slab. Where greater depths of bury are required, a specially designed transition slab shall be used.

1351.05 MATERIALS

1351.05.01 Aggregates

Aggregates shall be according to OPSS 1002, except that the requirement for gradation need not apply.

1351.05.02 Cement

Cement shall be Portland cement Type GU or blended cements Type GUb, i.e., Portland blast-furnace slag cement and Portland fly ash cement. Ground granulated blast-furnace slag or fly ash may also be added separately to Type GU Portland cement. Whether added separately or in the form of blended cement, ground granulated blast furnace slag shall constitute not more than 70 percent by mass of the total cementing material and fly ash shall constitute not more than 40 percent by mass of the total cementing materials.

Portland cement Type GU, blended cements Type GUb, ground granulated blast furnace slag, and fly ash shall be according to CAN/CSA A3000.

1351.05.03 Water

Water for concrete shall be according to OPSS 1302.

1351.05.04 Chemical and Air Entraining Admixtures

Chemical and air entraining admixtures shall be according to OPSS 1303.

1351.05.05 Steel Reinforcement

Steel reinforcement shall be according to OPSS 1440 and as specified in the Contract Documents.

Steel reinforcement for precast concrete components may be:

a) Reinforcing steel bars.

b) Welded steel wire fabric, 500 MPa minimum yield strength.

c) Welded deformed steel wire fabric, 500 MPa minimum yield strength.

Steel reinforcement for precast concrete adjustment units shall be according to CSA A257.4.

1351.05.06 Steps

Steps shall be made of plastic encased or unencased aluminum, stainless steel, or plastic encased steel. Aluminum steps shall be according to ASTM B 221, Alloy 6351, Temper T6. Stainless steel steps shall be made of stainless steel type 304.

For plastic encased steps, the casing shall be of a solid, low-density virgin polyethylene material which has been deemed nonobjectionable by the Health Protection Branch of Health and Welfare Canada based on the Canadian Food and Drug Act and Regulations, Division 23. In addition, the polyethylene material must be in compliance with Title 21 of the United States Code of Federal Regulations, Section 177.1520 (Olefin Polymers).

The minimum thickness of the polyethylene material shall not be less than 3 mm along the top wearing surface of the step, excluding anchor portion. The bottom part of the step and the entire anchor portion shall have a polyethylene coating not less than 2 mm in thickness.

1351.05.07 Concrete

Concrete for precast concrete components, including circular valve chambers and adjustment units shall be according to OPSS 1350 with a nominal 28-Day compressive strength of 30 MPa, except that the nominal 28-Day compressive strength for precast rectangular valve chambers shall be 40 MPa.

1351.05.08 Aluminum Safety Platforms

Aluminum safety platforms shall be according to ASTM B 221, Alloy 6351, Temper T6.

1351.05.09 Joint Seal System

Joint seal system for circular precast components for maintenance holes, catch basins, ditch inlets, and valve chambers shall comply with one of the following requirements:

a) Until May 1, 2006, either a dense homogeneous rubber according to CSA A257.3, Clause 8 and 9, or a flexible preformed gasket according to U.S. Federal Specifications SS-S-210A.

b) After May 1, 2006, a dense homogeneous rubber according to CSA A257.3, Clauses 8 and 9.

Joint seal system square or rectangular precast components for maintenance holes, catch basins, ditch inlets, and valve chambers shall comply with one of the following requirements:

a) A dense homogeneous rubber according to CSA A257.3, Clauses 8 and 9.

b) A flexible preformed gasket according to U.S. Federal Specifications SS-S-210-A.

1351.05.10 Membrane Curing Compound

Membrane curing compound shall be according to OPSS 1315.

1351.07 PRODUCTION

1351.07.01 General

A manufacturer producing precast reinforced concrete components for maintenance holes, catch basins, and ditch inlets must possess a current Prequalification Certificate, issued under the Plant Prequalification Program as outlined in the publication, Prequalification Requirements for Precast Concrete Drainage Products.

1351.07.02 Production Method

Production of all precast reinforced concrete components shall be according to CSA A257.4.

1351.07.03 Marking

Markings shall be according to CSA A257.4 and be permanently marked on all precast components in a position readily visible for inspection. The following information shall also be marked on maintenance hole, catch basin, and ditch inlet components:

a) The term *HOOP* on precast concrete riser sections utilizing hoop steel reinforcement.

b) The Prequalification Stamp as outlined in the publication, Prequalification Requirements for Precast Concrete Drainage Products.

1351.08 QUALITY ASSURANCE

1351.08.01 General

Acceptance of the precast reinforced concrete components will be based on the results of the step testing; concrete testing; hydrostatic testing, when specified in the Contract Documents; and salt scaling acceptance test for dry-cast concrete or air voids testing for wet-cast concrete.

Precast reinforced concrete components, equipment, other material, and labour used to perform the testing shall be supplied without charge to the Owner.

When specified in the Contract Documents, the Owner shall be notified in writing at least 72 hours before testing is carried out. In the event that the Owner is unable to be present during the test, the manufacturer shall provide an affidavit affirming the actual recorded test results.

1351.08.02 Step Testing

1351.08.02.01 Horizontal Load Testing

The horizontal load testing of steps shall be according to CSA A257.4, except that a load of 1.3 kN shall be applied on the tread over the width of 90 mm, next to the point the step turns into the wall to form the anchorage. If the step sustains a permanent set of 6 mm or less after application of the horizontal load, then the test is acceptable.

1351.08.02.02 Vertical Load Testing

The vertical load testing of steps shall be according to CSA A257.4. If the step sustains a permanent set of 10 mm or less after application of the vertical load, then the test is acceptable.

1351.08.02.03 Integrity of Plastic Encased Steps to be Installed in New Maintenance Holes and Valve Chambers

This test applies only to steps to be installed in new concrete, less than 1 hour old for dry cast and less than 12 hours old for wet cast. Three steps of the same type shall be tested for integrity of the plastic coating in the following manner:

a) The steps shall be maintained at -23°C ±2°C for 24 hours.

b) The steps shall then be left at 20°C ±2°C for 24 hours.

c) The steps shall then be cut in half, vertically, at the midpoint of the tread and the coating removed at the cut end of each half step to expose approximately 10 mm of metal.

d) A water solution shall be prepared containing sodium chloride, 3% by mass, and a wetting agent, e.g., liquid detergent, 0.25% by volume.

e) A wire shall be connected from an anode in the salt/detergent solution to an ohm meter.

f) Each half step shall then be tested separately for integrity of the plastic coating by connecting the exposed end to the ohm meter and placing the sample in the salt/detergent solution to within 50 mm of the exposed metal end for at least 5 minutes.

For acceptance of the steps, the following criteria shall apply:

a) There shall be no cracking, fracturing, or openings through the plastic encasement. An unacceptable casing will be indicated by a resistance of less than 1 megaohm after 5 minutes in the salt/detergent solution. An acceptable coating will be indicated by a near infinite resistance greater than 1 megaohm after 5 minutes in the salt/detergent solution.

b) If any single half step of the three complete steps tested proves to be unacceptable, then three new complete steps of the same type shall be tested in accordance with the above procedures. If any of these three steps subsequently tested do not meet the requirements of this specification, then the product shall be deemed to be unacceptable.

1351.08.02.04 Integrity of Plastic Encased Steps to be Installed in Existing Maintenance Holes and Valve Chambers

This test applies only to steps to be installed in existing concrete, older than 1 hour for dry cast and older than 12 hours for wet cast. Three steps of the same type shall be tested for integrity of the plastic coating in the following manner.

a) The steps shall be maintained in a cold room at -23°C ±2°C for 24 hours.

b) Within 5 minutes of removing them from the cold room, the steps shall be driven into 25 mm diameter holes drilled in 30 MPa concrete using a standard 1.45 kg rubber mallet. The concrete shall have been cured at least 28 days.

c) Taking care to avoid damage to the casing, the concrete shall be chipped away from around the steps and the steps left at room temperature at 20°C ±2°C for 24 hours.

d) The steps shall be cut in half vertically at the midpoint of the tread and the coating removed at the cut end of each half step to expose approximately 10 mm of metal.

e) A water solution shall be prepared containing sodium chloride, 3% by mass, and a wetting agent, e.g., liquid detergent, 0.25% by volume.

f) A wire shall be placed from an anode in the salt/detergent solution to an ohm meter.

g) Each half step shall then be tested separately for integrity of the plastic coating by connecting the exposed end to the ohm meter and placing the sample in the salt/detergent solution to within 50 mm of the exposed metal end for at least 5 minutes.

For acceptance of the steps, the following criteria shall apply:

a) There shall be no cracking, fracturing, or openings through the plastic encasement. An unacceptable casing will be indicated by a resistance of less than 1 megaohm after 5 minutes in the salt/detergent solution. An acceptable coating will be indicated by a near infinite resistance, greater than 1 megaohm after 5 minutes in the salt/detergent solution.

b) If any single half step of the three complete steps tested proves to be unacceptable, then three new complete steps of the same type shall be tested in accordance with the above procedures. If any of these three steps subsequently tested do not meet the requirements of this specification, then the product shall be deemed to be unacceptable.

1351.08.03 Concrete Testing

1351.08.03.01 Concrete Compressive Strength

Concrete compressive strength shall be according to CSA A257.4 except cylinders shall be cast and tested monthly.

If the specified strength requirement of the concrete has not been reached after 28 days, two cores shall be taken from a component at locations approved by the Owner. Cores shall be moisture conditioned and tested according to CSA A23.1. Repairs to the core holes shall be to the satisfaction of the Owner.

1351.08.03.02 Salt Scaling Acceptance Test

The Salt Scaling Acceptance Test shall be according to LS-412 except as noted below.

Compliance with the test requirement is based upon a loss of mass of not more than 0.8 kg/m^2 from the surface after 50 cycles of freezing and thawing. If the specimens fail the salt scale resistance test, the manufacturer shall submit proposals of remedial action to the Owner for consideration.

Salt scale resistance testing shall be done at least once a year per mix design. If any mix design components or component suppliers change or component mix design proportions change by more than 10%, then the mix design shall be considered new.

Specimens, at least 300 x 300 mm in size, shall be selected from finished and cured product. Specimens shall be representative of the manufacturer's production. Test specimens supplied from the finished and cured product are considered fully cured and salt scale resistance testing can start immediately on these specimens. Specimens do not need to be saturated with moisture before testing.

A dyke may be made of any material that will adhere to the specimen and serve to maintain the salt solution on the surface of the specimen throughout the period of the test. The dyke must be applied during the dry period. The dyke must not affect the test results. If a dyke is a precast mortar dyke, an air entrained paste shall be applied to the edges around the perimeter of the test specimen and any excess paste shall be removed. After allowing the paste to harden for 24 hours, apply epoxy sealant to the inside, top, and outside of the dyke extending the outside surface epoxy treatment to 25 mm below the joint.

1351.08.03.03 Air Voids Testing

Air voids testing in hardened concrete shall be done at least once a year per mix design according to OPSS 1350.

1351.08.03.04 Hydrostatic Testing

When specified in the Contract Documents, hydrostatic tests are to be carried out on any of the sizes of precast sections or bases to be supplied for the Contract. Such tests shall be carried out by the precast maintenance hole supplier in the presence of the Owner's representative in accordance with the following requirements:

a) A minimum of two maintenance hole riser sections shall be assembled according to the manufacturer's instructions.

b) When testing is performed in such a manner that the joint is closed, the restraining force exerted on the joint shall not exceed the force represented by the weight of a precast maintenance hole 9 m in height of the size being tested.

c) The ends of the test sections shall be bulkheaded and the section filled with water.

d) The maintenance hole sections shall be subjected to an internal hydrostatic pressure of 60 kPa for a period of ten minutes.

e) All joints shall be tested. When only two maintenance hole riser sections are tested the bulkhead joints shall also be tested.

f) There shall be no leakage through the maintenance hole joints or walls. Damp spots and beads of moisture adhering to the walls of the sections shall not be considered as leakage.

g) As an option, the two test riser sections may be allowed to soak for a period of 24 hours before proceeding with the hydrostatic test.

h) Up to 1.0% of the number of each size included in the Contract shall be tested, but in no case shall less than 2 riser sections be tested for each maintenance hole size. Riser sections supplied for testing shall be sound, full-size sections.

1351.08.04 Inspection and Testing

The Owner’s representative shall be permitted free access to all portions of the plant engaged in the production of the precast maintenance hole, catch basin, and ditch inlet components, steps, and adjustment units and shall be provided with all reasonable facilities to secure the required samples and be satisfied that the components supplied are in accordance with this specification.

1351.09 OWNER PURCHASE OF MATERIAL

1351.09.01 Measurement and Payment

For measurement purposes, a count will be made of the number of complete structures delivered and accepted.

For measurement purposes, a count will be made of the number of concrete adjustment units delivered and accepted.

Payment at the price specified in the purchasing order shall be for supply and delivery of the complete structure, individual components, steps, concrete adjustment units, or safety platforms to the destination at the time specified.

The cost of all testing, except those performed in the Owner's laboratory, shall be included in the price.

Appendix 1351-A, Commentary for OPSS 1351, November 2004

Note: This appendix does not form part of the standard specification. It is intended to provide information to the designer on the use of this specification in a Contract.

Designer Action/Considerations

The designer should specify the following in the Contract Documents:

- Precast reinforced concrete component drawings. (1351.04.01.01)

- If Owner wishes 72 hours notice prior to quality assurance testing being carried out. (1351.08.01)

- If the Owner requires hydrostatic testing. For deeper maintenance hole test sections, higher hydrostatic test pressures to 90 kPa may be requested. (1351.08.03.03)

The designer should ensure that the Ontario Provincial Standards General Conditions of Contract and the 100 Series General Specifications are included in the Contract Documents.

Related Ontario Provincial Standard Drawings

OPSD 404.020 to 404.022	Aluminum Safety Platforms
OPSD 405.010 to 405.020	Maintenance Hole Steps
OPSD 701.010 to 701.015	Precast Concrete Maintenance Holes, 1200 to 3600mm Diameter
OPSD 701.030 to 701.081	Precast Concrete Maintenance Hole Components, 1200 to 3600mm Diameter
OPSD 702.040	Precast Concrete Ditch Inlet Maintenance Hole Type A, 1200 x 1200mm
OPSD 702.050	Precast Concrete Ditch Inlet Maintenance Hole Type B, 1200 x 1200mm
OPSD 703.011 to 703.015	Precast Concrete Single Inlet Flat Cap, 1500 to 3600mm Diameter
OPSD 703.021 to 703.024	Precast Concrete Twin Inlet Flat Cap, 1500 to 3600mm Diameter
OPSD 704.010	Precast Concrete Adjustment Units for Maintenance Holes and Catch Basins
OPSD 705.010	Precast Concrete Catch Basin, 600 x 600mm
OPSD 705.020	Precast Concrete Twin Inlet Catch Basin, 600 x 1450mm
OPSD 705.030	Precast Concrete Ditch Inlet, 600 x 600mm
OPSD 705.040	Precast Concrete Ditch Inlet, 600 x 1200mm
OPSD 706.010 to 706.041	Precast Concrete Ditch Inlets 600 x 1200mm with 1500 to 3000mm Diameter Flat Caps
OPSD 1101.010	Precast Valve Chamber, 1200mm and 1500mm Diameter
OPSD 1101.012 to 1101.015	Precast Concrete Valve Chamber with Poured-In-Place Thrust Blocks, 1800 x 2400mm
OPSD 1101.016 to 1101.019	Precast Concrete Valve Chamber with Poured-In-Place Thrust Blocks, 2400 x 3000mm

ONTARIO PROVINCIAL STANDARD SPECIFICATION

METRIC
OPSS 1301
SEPTEMBER 1996

MATERIAL SPECIFICATION FOR CEMENTING MATERIALS

TABLE OF CONTENTS

1301.01	**SCOPE**
1301.02	**REFERENCES**
1301.03	**Not Used**
1301.04	**SUBMISSION AND DESIGN REQUIREMENTS**
1301.04.01	**Submissions**
1301.04.01.01	**Product Data**
1301.05	**MATERIALS**
1301.05.01	**Physical and Chemical Requirements**
1301.06	**Not Used**
1301.07	**PRODUCTION**
1301.07.01	**Packaging and Delivery**
.02	**Marking**
.03	**Handling**
.04	**Storage**
.05	**Acceptance or Rejection**
1301.08	**QUALITY ASSURANCE**
1301.08.01	**Inspection, Sampling and Testing**
.02	**Acceptance or Rejection**
1301.09	**AUTHORITY PURCHASE OF MATERIAL BY PURCHASE ORDER**
1301.09.01	**Measurement and Payment**
.02	**Basis of Payment**
1301.10	**Not Used**

1301.01 SCOPE

This specification covers the requirements for cementing materials together with the method of sampling, testing, delivery, handling and storage, prior to use.

The following types of cementing materials are covered by this specification:

Portland Cements

Type 10-Normal
Type 20-Moderate with respect to the heat of hydration or sulphate resistance.
Type 30-High Early - Strength
Type 40-Low Heat of Hydration
Type 50-Sulphate Resistant

Blended Hydraulic Cements

Type 10-SPortland Blast-Furnace Slag Cement
Type 10-SMSlag-Modified Portland Cement
Type 10-SFPortland Silica Fume Cement
Type 10-FPortland Fly Ash Cement
Type 10-FMFly Ash Modified Portland Cement

Supplementary Cementing Materials

Slag	Ground granulated blast furnace slag.
Fly Ash	Ash produced from burning coal, collected in a precipitator.
Silica Fume	The finely divided residue resulting from the production of silicon or silicon containing alloys that is carried from the burning surface area of a furnace by exhaust gases.

1301.02 REFERENCES

This specification refers to the following standards, specifications or publications:

Canadian Standards Association Standards:

CSA A5/A8/A362-93 Portland Cement/Masonry Cement/Blended Hydraulic Cement

CSA A23.5-M86 Supplementary Cementing Materials

1301.04 SUBMISSION AND DESIGN REQUIREMENTS

1301.04.01 Submissions

1301.04.01.01 Product Data

The following product data shall be submitted to the Owner prior to approval.

a. A test certificate from a laboratory, qualified according to the Materials Section, showing compliance of the cementing material with all the physical and chemical test requirements of CSA A5, A362, or A23.5 including the additional requirements of this specification and the optional test for false set if the product is Portland Cement.
b. The manufacturer's and supplier's name.
c. Location of the mill.
d. A 5 kg composite sample of current production of the cementing material.
e. Material Safety Data Sheet.

1301.05 MATERIALS

1301.05.01 Physical and Chemical Requirements

Cementing materials shall conform to the physical and chemical requirements of CSA A5, CSA-A362 or CSA-A23.5 depending on the cementing material type used. Fly ash, ground granulated blast furnace slag and silica fume shall conform to the supplementary optional chemical and physical requirements of CSA-A23.5 with the exception of the requirements for "Reactivity with Cement Alkalies".

The cementing material shall be free of undue lumps or partially hydrated material.

At the time of delivery to the concrete producer and at the time of use, the temperature of cementing material shall not exceed 65EC.

Where cementing material is required to be certified as being free from early stiffening tendencies, the penetration shall be 50 percent or greater as determined by the method specified in CSA A5, Appendix A.

The testing shall be done by an organization certified by the Standard Council of Canada or by an organization participating in the Cement and Concrete Reference Laboratory at the National Institute of Standards and Technology correlation and inspection programs. When the laboratory is the manufacturer's laboratory, an Engineer employed by an independent certified organization shall witness the testing and affix their Engineer's stamp to the test report.

1301.07 PRODUCTION

1301.07.01 Packaging and Delivery

Bags used in the supply of packaged cement shall be of such composition and quality as to provide adequate protection from the elements and to withstand normal handling procedures.

Bagged cementing material shall be suitably protected against weather and dampness during shipment.

Cementing materials, delivered in bulk, shall be transported in totally enclosed containers.

1301.07.02 Marking

The name of the supplier, and type of cementing material shall be plainly marked on each bag.

Cementing material delivered in bags or in bulk shall be accompanied by a shipping invoice which shall detail, in addition to the name of the supplier and the type of cementing material, the name of the manufacturer and the mill.

1301.07.03 Handling

All equipment used for handling, weighing and batching cementing material shall be suitably protected against wind and weather.

Cementing material delivered in bulk shall be unloaded directly into the storage silo, enclosed bin or weigh hopper and shall be batched directly there from without rehandling other than by fully enclosed elevators, conveyors, chutes or pipes.

1301.07.04 Storage

All cementing material shall be suitably protected from the weather and from dampness during storage.

Bagged cementing material shall be stored within a weather-tight building except that when the period of storage will not exceed one month, temporary protection by complete enclosure within tarpaulins, plastic sheets or the like will be permitted. Bags shall be stacked, clear of the ground, so as to provide a space for air circulation.

Bagged cement stored in a building shall not be closer than 600 mm to the roof or walls.

Bulk or bagged cementing material shall be stored separately to prevent contamination and to permit ready identification of the cementing material at all times.

1301.07.05 Acceptance or Rejection

Where there is doubt as to the quality of any cementing material, it shall be neither shipped to nor used in any work until testing to prove the material is acceptable, has been done by the supplier and notice of acceptance has been received from the purchaser.

1301.08 QUALITY ASSURANCE

1301.08.01 Inspection, Sampling and Testing

Inspection, sampling and testing of the cementing materials will be done according to the methods and procedures of the CSA Standard for the cementing material type.

The Owner reserves the right to perform such inspection, sampling and testing at such times and locations, as may be deemed necessary to determine the acceptability of the cementing material. Free and unhampered access shall be provided to the Owner's representative for inspection and sampling purposes.

1301.08.02 Acceptance or Rejection

Failure of any quality assurance sample to comply with the requirements of this specification shall be sufficient cause to prohibit the use of the material represented by the sample.

1301.09 AUTHORITY PURCHASE OF MATERIAL BY PURCHASE ORDER

When material is obtained by the Owner by purchase order, the following requirements will apply.

1301.09.01 Measurement and Payment

Measurement for payment of cementing materials shall be by bags or tonnes as specified.

1301.09.02 Basis of Payment

Payment at the price specified in the purchase order shall be for the supply and delivery of the cementing material to the destination and at the times specified. The cost of all testing, except that performed in the Owner's laboratory, shall be included in the price.

AMENDMENT TO OPSS 1821, MAY 1993

Special Provision No. 118S03 March 2006

Air Void System Parameters, Salt Scaling and Concrete Cover Measurements of Precast Hardened Concrete

1821.02 REFERENCES

Section 1821.02 of OPSS 1821, is amended by the addition of the following:

Ministry of Transportation, Ontario, Laboratory Testing Manual:

LS-100 Method for Rounding–Off of Test Data and Other Numbers
LS-412 Method of Test for Scaling Resistance of Concrete Surfaces Exposed to De-icing Chemicals

1821.05 MATERIALS

1821.05.01 Concrete

Subsection 1821.05.01 of OPSS 1821 is amended by deletion of clauses 1821.05.01.01, 1821.05.01.04 and 1821.05.01.05 and replacing them with the following:

1821.05.01.01 General

Concrete shall be according to OPSS 1350 except that the air void system parameters of wet cast concrete shall be according to this special provision and the allowable replacement of Portland cement by ground granulated blast furnace slag in dry cast concrete shall be limited to a maximum of 40% by mass of total cementing materials.

1821.05.01.04 Air Void System in Hardened Concrete - Wet Cast Concrete

The air void system in hardened concrete, when tested in conformance to ASTM C457, shall be:

Air Content	3.0% minimum
Spacing Factor	0.200 mm maximum

1821.05.01.05 Salt Scaling - Dry Cast Concrete

For dry cast concrete, the salt scaling resistance when tested according to laboratory test method LS-412 and this specification shall have a mass loss of not more than 0.8 kg/m^2.

1821.07 PRODUCTION

1821.07.10 Quality Control

Subsection 1821.07.10 of OPSS 1821 is amended by the addition of the following clauses:

1821.07.10.06 Testing of Air Void Content of Hardened Concrete in Wet Cast Concrete

The manufacturer shall achieve an air void system in the hardened concrete as specified in the materials section.

For evaluation of air void system parameters, the manufacturer shall remove cores from hardened concrete and shall have the cores tested in accordance with ASTM C457, except that a magnification of 100 Ξ to 125 Ξ shall be used. Testing shall be carried out by a laboratory and an operator(s) who participate in the MTO Air Void Analysis Correlation Program and are on the Ministry's list of qualified laboratories and operators for this test. The air content shall be reported to one decimal place and spacing factor shall be reported to three decimal places. Rounding-off of test data shall be done in accordance with LS-100.The cores shall be obtained and treated according to CSA A23.2

As a minimum, two 100 X 200 mm cores will be removed and tested for every 1000 square meters of floor area of box culvert or box sewer. All cores shall be taken when the concrete is a minimum 7 days of age. Cores shall be cut lengthwise into two halves, with one half to be tested by the Manufacturer in accordance with ASTM C457 "Standard Test Method for Microscopical Determination of Parameters of the Air-Void System in Hardened Concrete" and the other forwarded to the Ministry within two weeks of extracting the core (Manager, Concrete Section, Room 15, Building C, 1201 Wilson Avenue, Downsview, Ontario, M3M 1J8).

Air void analysis results obtained by the manufacturer shall be forwarded to the Contract Administrator within 30 days of removal of the cores from the hardened concrete. Air void samples shall be retained by the manufacturer for a period of one year from the date of testing and shall be provided to the Contract Administrator on request.

Acceptance of air void system parameters shall be based on individual core results for air content, and the average of each pair of cores for spacing factor. Concrete, which fails to meet the requirements for air void system parameters as specified here, will be considered unacceptable. The manufacturer may submit proposals for remedial action to the Contract Administrator, or may elect to remove and replace the deficient precast product.

1821.07.10.07 Concrete Cover Measurement

Concrete cover measurement shall be made on two box units, selected at random, per group of 15 box units or fraction thereof of each continuous production run of a single size.

Measurement shall be obtained on a one-metre grid on all interior and exterior surfaces of the box unit, including the ends of the unit.

Cover measurements shall be carried out by a method acceptable to the Contract Administrator and shall be reported in writing to the Contract Administrator prior to installation of the units.

1821.07.10.08 Salt Scaling Resistance in Dry Cast Concrete

For evaluation of the salt scaling resistance of the dry cast concrete, the manufacturer shall cut and test a set of two specimens for every 1000 square meters of floor area from finished and cured box culvert or box sewer. The specimens shall be 300x300mm and shall be tested according to LS-412 without further curing.

The salt scaling result shall be the average of a set.

Salt scaling results obtained by the manufacturer shall be forwarded to the Contract Administrator within 14 weeks of casting the box culvert or box sewer.

1821.08 QUALITY ASSURANCE

1821.08.01 Acceptance

Subsection 1821.08.01 of OPSS 1821, is amended by the addition of the following sentence to the first paragraph:

The Contractor shall deliver the samples to the Ministry for testing (Manager, Concrete Section, Room 15, Building C, 1201 Wilson Avenue, Downsview, Ontario, M3M 1J8).

WARRANT: Always with OPSS 422, May 1993.

City of Montreal Specifications

DEVIS TECHNIQUE NORMALISÉ
3VM-20

BÉTON À HAUTE PERFORMANCE (BHP) RÉSISTANCE À LA COMPRESSION DE 50 MPa OU PLUS

AOÛT 2005

VILLE DE MONTRÉAL
SERVICE DES INFRASTRUCTURES,
TRANSPORT ET ENVIRONNEMENT

DIVISION DES LABORATOIRES

Aucun produit, autre que l'eau de gâchage et ceux mentionnés dans le présent article, ne peut être incorporé au mélange de béton sans l'autorisation du Directeur.

4.2 Liant

Utiliser du ciment hydraulique composé type GUb-SF, GUb-F/SF ou GUb-S/SF conforme à la norme CAN/CSA A3001-03 du Compendium des matériaux liants, sauf si autrement spécifié dans les documents contractuels.

Si les documents contractuels spécifient du ciment Portland type MH ou du ciment hydraulique composé équivalent, la chaleur d'hydratation à 7 jours, déterminée selon la méthode CSA A3004-B7 ne doit pas excéder 350 J/g.

4.3 Granulats

Sauf si autrement spécifié dans les documents contractuels, utiliser des granulats fins et des gros granulats de densité normale conformes à la norme CAN/CSA-A23.1, et particulièrement aux exigences ci-dessous.

Les granulats fins peuvent être du sable naturel, du sable manufacturé, ou une combinaison de sable naturel et de sable manufacturé. Le sable manufacturé et les gros granulats doivent provenir de roc de carrière concassé de composition granitique, ou du concassage des fractions grossières de produits de sablières ou gravières. La fragmentation doit être d'au moins 95 % lorsque évaluée en conformité avec la norme LC 21-100.

Notes : Certains sables manufacturés peuvent causer des difficultés lors du pompage ou de la finition.

Les gros granulats utilisés pour des BHP d'une classe de résistance supérieure à 60 MPa à 28 jours doivent être lavés, sauf si le fournisseur du béton peut démontrer que la résistance spécifiée peut être obtenue sans lavage.

Résistance à la compression à 24 heures	Min. 15 % de la résistance à la compression spécifiée à 28 jours.
Résistance à la compression exigée	Tel que spécifié à l'âge indiqué dans les documents contractuels.
Réseau des bulles d'air Détermination selon la procédure A ou B de la norme ASTM C 457 sur une face sciée le long de l'axe d'un cylindre confectionné de la même manière que ceux destinés à l'essai de résistance à la compression ou sur une carotte de béton prélevée dans un élément désigné par le Directeur, le long de l'axe de cette dernière, ou Facteur de durabilité Détermination selon la norme ASTM C 666, procédure A.	Facteur d'espacement moyen : max. 250 µm, sans aucun résultat individuel supérieur à 300 µm. Facteur de durabilité (DF) : min. 90% après 300 cycles de gel/dégel.
Perméabilité aux ions chlorures * Essai effectué selon la norme ASTM C 1202 sur des tranches de béton prélevées de cylindres confectionnés de la même manière que ceux destinés à l'essai de la résistance à la compression, ou sur des carottes prélevées dans un élément désigné par le Directeur.	Max. 800 Coulombs à 28 jours.
Résistance à l'écaillage Essai effectué selon la méthode décrite à l'annexe B de la norme NQ 2621-900 **.	Masse des débris détachés de la surface exposée à la solution saline après 56 cycles de gel-dégel : max. 500 g/m^2.

* : Si le béton contient un inhibiteur de corrosion, la perméabilité aux ions chlorures doit être déterminée sur un béton de même formulation, mais sans inhibiteur de corrosion

** :L'essai peut être réalisé sur des carottes prélevés d'un élément désigné par le Directeur.

GUIDE DE SPÉCIFICATIONS À L'USAGE DU CONCEPTEUR

Article

4.2 Spécifier si du ciment hydraulique composé ternaire type GUb-F/SF ou type GUb-S/SF doit être utilisé.

Pour les éléments massifs propices à la fissuration, ou pour ceux dont la plus petite dimension excède 750 mm, spécifier le ciment portland type MH ou un ciment hydraulique composé équivalent conforme à la norme A3001-03.

Consulter le Laboratoire pour des recommandations.

4.3 Spécifier si des granulats fins ou des gros granulats de nature particulière sont requis (Ex. : gravier non concassé, gravier concassé, granulats décoratifs, etc.). Pour le béton architectural, consulter la norme CAN/CSA-A23.4.

5.1 Spécifier l'endroit où les caractéristiques sont exigées, si ailleurs qu'au point de livraison.

5.3 Dans les cas de congestion d'armature ou de sections minces, spécifier des gros granulats de dimension nominale maximale de 10 mm.

5.4 Spécifier l'affaissement requis, si autre que 180 mm.

5.5 Indiquer si l'air entraîné n'est pas requis.

5.6 Spécifier si un inhibiteur de corrosion est requis. Spécifier le dosage selon les recommandations de l'appendice C10 de la norme CAN/CSA-S413-94, Parking Structures, en fonction de la teneur en ions chlorures prévue. Le dosage spécifié ne doit pas être inférieur à 12 litres de solution par mètre cube de béton.

6.0 Spécifier la résistance minimale à la compression exigée à 24 heures, si autre que 15 % de la résistance à la compression spécifiée à 28 jours.

Spécifier la résistance à la compression exigée, et indiquer à quel âge elle est requise. Il est recommandé d'indiquer 28 jours pour les éléments dont la plus petite dimension est inférieure à 750 mm, et 91 jours pour les éléments dont la plus petite dimension est supérieure à 750 mm.

Indiquer l'âge auquel la perméabilité aux ions chlorures doit être déterminée, si autre que 28 jours.

Indiquer l'âge auquel l'essai de résistance à l'écaillage doit débuter si autre que 28 jours.

DEVIS TECHNIQUE NORMALISÉ
3VM-10

BÉTON RÉGULIER
RÉSISTANCE À LA COMPRESSION MOINS DE 50 MPa

JUIN 2005

VILLE DE MONTRÉAL
SERVICE DES INFRASTRUCTURES, TRANSPORT ET ENVIRONNEMENT
DIRECTION DE L'ADMINISTRATION ET DU SOUTIEN TECHNIQUE

DIVISION DES LABORATOIRES

4.0 Constituants

4.
Constituants

4.1 Généralités

Soumettre au Directeur pour examen et agrément les renseignements et documents indiqués à l'annexe A. Ceux-ci doivent parvenir au Directeur au plus tard 15 jours ouvrables avant le début du bétonnage. Le Directeur peut à sa discrétion dispenser de soumettre certains renseignements et documents, si la centrale du fournisseur du béton est préapprouvée par le Laboratoire, et si les formules des mélanges de béton proposées et les constituants ont été récemment approuvés par le Laboratoire. L'agrément ou l'autorisation du Directeur n'est officialisé que s'il est exprimé par lui par écrit.

Aucun produit, autre que l'eau de gâchage et ceux mentionnés dans le présent article, ne peut être incorporé au mélange de béton sans l'autorisation du Directeur.

4.2 Liant

Pour le béton de trottoir ou de bordure, utiliser un liant consistant en 70 à 80 % de ciment portland type GU et en 20 à 30 % de ciment hydraulique composé. Le ciment composé sera de type GUb-SF, ou de type GUb-F/SF ou GUb-S/SF.

Dans d'autres cas, utiliser du ciment portland type GU, sauf si autrement spécifié dans les documents contractuels. Si ceux-ci spécifient du ciment hydraulique composé, il doit se conformer au Compendium des matériaux liants A3000. S'ils spécifient du ciment portland type MH ou du ciment hydraulique composé équivalent, la chaleur d'hydratation à 7 jours, déterminée selon la méthode A3004-B7, ne doit pas excéder 350 J/g.

Sauf si autrement spécifié dans les documents contractuels, un ciment type HE sera utilisé pour la réalisation de trottoirs, bordures et dalles de pavage du 15 octobre à la fin de la période de construction automnale.

4.3 Granulats

Sauf si autrement spécifié dans les documents contractuels, utiliser des granulats fins et des gros granulats de densité normale conformes à la norme CAN/CSA-A23.1, et particulièrement aux exigences ci-dessous.

Les granulats fins peuvent être du sable naturel, du sable manufacturé, ou une combinaison de sable naturel et de sable manufacturé. Le sable manufacturé et les gros granulats doivent provenir de roc de carrière concassé ou du concassage des fractions grossières de produits de sablières ou gravières. La fragmentation doit être d'au moins 95 % lorsque évaluée en conformité avec la norme LC 21-100.

Note: Certains sables manufacturés peuvent causer des difficultés lors du pompage ou de la finition.

6.0 Caractéristiques du béton durci

6. Caractéristiques du béton durci

Les caractéristiques requises du béton durci sont indiquées au tableau ci-dessous, sauf si autrement spécifiées dans les documents contractuels. Ces caractéristiques sont vérifiées sur des cylindres de béton de 100 x 200 mm, sauf si la méthode d'essai applicable spécifie ou accepte des spécimens d'autres dimensions.

Résistance à la compression minimale exigée à 28 jours	32 MPa pour le béton de trottoir et de bordure non armée et 35 MPa pour les autres bétons.
Réseau des bulles d'air Détermination selon la procédure A ou B de la norme ASTM C 457 sur une face sciée le long de l'axe d'un cylindre confectionné de la même manière que ceux destinés à l'essai de résistance à la compression ou sur une carotte de béton prélevée dans un élément désigné par le Directeur, le long de l'axe de cette dernière.	Facteur d'espacement moyen : max. 230 µm, sans aucun résultat individuel supérieur à 260 µm.
Perméabilité aux ions chlorures Essai effectué selon la norme ASTM C 1202 sur des tranches de béton prélevées de cylindres confectionnés de la même manière que ceux destinés à l'essai de la résistance à la compression*, ou sur une carotte de béton prélevée dans un élément désigné par le Directeur, le long de l'axe de cette dernière.	Max. 1500 Coulombs à 28 jours.
Résistance à l'écaillage Essai effectué selon la méthode décrite à l'annexe B de la norme NQ 2621-900**.	Masse des débris détachés de la surface exposée à la solution saline après 56 cycles de gel-dégel : max. 500 g/m^2.

* Si le béton contient un inhibiteur de corrosion, la perméabilité aux ions chlorures doit être déterminée sur un béton de même formulation, mais sans inhibiteur de corrosion.

** L'essai peut être réalisé sur des carottes prélevées d'un élément désigné par le Directeur.

GUIDE DE SPÉCIFICATIONS À L'USAGE DU CONCEPTEUR

Article

4.2 Le ciment portland type GU est adéquat pour la réfection de chaussée et le béton de charpente.

Pour le béton armé exposé aux chlorures, les chapes, et autres utilisations particulières, consulter le Laboratoire pour des recommandations relativement au choix du type de liant et d'adjuvant appropriés.

Pour les éléments massifs propices à la fissuration, ou pour ceux dont la plus petite dimension excède 750 mm, spécifier le ciment portland type MH ou un ciment hydraulique composé équivalent. Consulter le Laboratoire pour des recommandations.

Pour le béton en contact avec des sulfates, spécifier le type de ciment approprié selon le tableau 3 de la norme CAN/CSA-A23.1, en fonction de la teneur en sulfates. Pour les structures construites dans le socle rocheux, le liant doit être au minimum de type MS ou équivalent.

4.3 Spécifier si des granulats fins ou des gros granulats de nature particulière sont requis (ex. : gravier naturel, gravier concassé, granulats décoratifs, etc.). Pour le béton architectural consulter la norme CAN/CSA-A23.4.

4.3.1 Pour les trottoirs et les trottoirs-dalles fortement sollicités par les sels déglaçants où l'apparition de cônes d'éclatement n'est pas tolérée, spécifier un granulat de composition granitique conforme aux exigences du Devis descriptif 3VM-20.

5.1 Spécifier l'endroit où les caractéristiques sont exigées, si ailleurs qu'au point de livraison.

5.2 La résistance à la compression de 32 MPa à 28 jours et le rapport eau/liant de 0,45 sont adéquats pour le béton de trottoir et de bordure. La résistance à la compression de 35 MPa à 28 jours et le rapport eau/liant de 0,40 sont généralement adéquats pour les bétons de charpente, de parapet, de chasse-roue, de glissière, de cours d'eau, d'intersection de rues, et de réparation autour des services. La résistance à la compression du béton pour une chape ne doit pas être supérieure à 30 MPa.

DEVIS TECHNIQUE NORMALISÉ
3VM-50

BÉTON PROJETÉ PAR VOIE HUMIDE

AVRIL 2005

VILLE DE MONTRÉAL
SERVICE DES INFRASTRUCTURES,
TRANSPORT ET ENVIRONNEMENT
DIVISION DES LABORATOIRES

Formulation et caractéristiques du béton frais

Le Fabricant du mélange est seul responsable pour formuler et fournir un mélange convenable au pompage et à l'application par projection, et dont les caractéristiques sont conformes aux exigences de ce devis et à celles contenues dans les documents contractuels.

5.2 Teneur en liant

	Mortier	Béton
Teneur maximale en liant, kg/m³		
Ciment type 10E-SF	475	460
Ciment type 10 avec ajout de fumée de silice	475	460
Ciment type 30 avec ou sans ajout de fumée de silice	490	475
Rapport eau/liant, max.	0,45	0,45

5.3 Affaissement

L'affaissement du béton lors de son introduction dans la pompe, mesuré en conformité avec la norme CSA A23.2-5C doit être compris entre 60 et 100 mm. Il doit nécessairement convenir à la mise en oeuvre prévue, et le dosage de réducteur d'eau et / ou de superplastifiant doivent être ajustés en conséquence.

5.4 Air occlus

La teneur en air dans le béton frais avant pompage, déterminé en conformité avec la norme CSA A23.2-4C, doit être comprise entre 10 et 15 %.

5.5 Fibres

Lorsque des fibres sont prescrites, utiliser le type et le dosage spécifiés dans les documents contractuels.

5.6 Température

Maintenir la température du béton à la sortie de la lance de projection entre 10 et 25°C.

6.1 Généralités

6. Caractéristiques du béton durci

Les caractéristiques du béton durci sont vérifiées sur des spécimens de béton prélevées de panneaux de béton projetéconfectionnés au chantier par l'Entrepreneur, dans des conditions identiques à celles des travaux, en

être appliqué.	
<u>Réseau des bulles d'air et teneur en air</u> Analyse réalisée en conformité avec la procédure B de la norme ASTM C457, sur une face sciée le long de l'axe d'un spécimen de dimensions adéquates prélevé d'un panneau ou du béton en place.	Facteur d'espacement moyen : égal ou inférieur à 300 µm. Aucune valeur ne doit excéder 320 µm. Teneur en air : 3,5 à 7 %.
<u>Absorption par ébullition et volume des vides perméables</u> Essai réalisé en conformité avec la norme ASTM C642 sur trois carottes de 75 mm de diamètre et de pas moins de 100 mm de long prélevées du même panneau. Le résultat est la moyenne des valeurs obtenues sur les trois carottes.	Absorption par ébullition : max. 8 % à 28 jours. Volume des vides perméables : max. 15 % à 28 jours.
<u>Perméabilité aux ions-chlore</u> Essai réalisé en conformité avec la norme ASTM C1202 sur la tranche de 50 mm de l'extrémité supérieure d'une carotte de 100 mm de diamètre en mettant la surface supérieure en contact avec la solution de NaCl. Cette surface est meulée afin de la rendre lisse. Si le bord comporte des ébréchures de 12 mm ou moins, il est réparé avec un mortier de haute résistance. Si les ébréchures ont plus de 12 mm, la tranche comportant les ébréchures est rejetée. Le résultat est la moyenne des valeurs obtenues sur les deux carottes prélevées du même panneau.	Béton ou mortier contenant du ciment Portland type 10E-SF, ou type 10 avec ajout de fumée de silice, ou type 30 avec ou sans ajout de fumée de silice : max. 1000 coulombs à 28 jours.
<u>Résistance à l'écaillage</u> Essai réalisé à 28 jours en conformité avec la méthode décrite en annexe A de la norme NQ 2621-900, sur deux plaques découpées de deux panneaux du même âge. Le résultat est la moyenne des valeurs obtenues sur les deux plaques.	Masse des débris détachés de la surface exposée à la solution saline après 56 cycles de gel-dégel : max. 1200 g/m^2.

905.

- <u>En bétonnière mobile</u> : l'identification de la bétonnière, le certificat de conformité conformément au protocole de certification NQ 2621-905, le certificat de conformité à la norme ASTM C685, les certificats d'étalonnage des contrôles pour chaque mélange à produire, ne datant pas de plus de 6 mois.

- Soumettre au Directeur pour chaque bétonnière mobile et pour chaque mélange à produire, un certificat d'étalonnage selon la norme ASTM C685 datant de moins de 6 mois, émis par un laboratoire reconnu par le Directeur. En cas de modification des proportions des constituants ou de leurs sources d'approvisionnement, soumettre un nouveau certificat d'étalonnage pour chaque bétonnière mobile et pour chaque mélange modifié.

<u>Exécution</u>

- Les qualifications des opérateurs de lance.

- La demande de projeter en couches successives.

- Le nom et les caractéristiques du produit de cure.

- La demande d'utiliser seulement un produit de cure pour les surfaces de petites dimensions.

<u>Caractéristiques du béton durci</u>

- Les résultats des essais de résistance à la compression, de l'analyse du réseau des bulles d'air, des essais d'absorption par ébullition, du volume des vides perméables, de perméabilité aux ions-chlorure et de résistance à l'écaillage. Tous ces résultats ne doivent pas dater de plus de quarante-cinq jours, à l'exception du résultat de l'essai de résistance à l'écaillage qui doit être soumis aussitôt obtenu.

GUIDE DE SPÉCIFICATIONS À L'USAGE DU CONCEPTEUR — ANNEXE B

<u>Article</u>

4.2 Spécifier le type de ciment si autre que Portland type 10E-SF ou Portland type 10 avec ajout de fumée de silice.

4.3.1 Spécifier si le mélange requis est un mélange à béton ou à mortier.

Si des fibres sont requises, le spécifier et en indiquer la quantité (dosages

DEVIS TECHNIQUE NORMALISÉ
3VM-40

BÉTON PROJETÉ PAR VOIE SÈCHE

DÉCEMBRE 2000

VILLE DE MONTRÉAL
SERVICE DE L'ENVIRONNEMENT, DE LA
VOIRIE ET DES RÉSEAUX
DIVISION DES LABORATOIRES

5. Formulation et caractéristiques du béton frais

5.1 Généralités

Le Fabricant du mélange est seul responsable pour formuler et fournir un mélange convenable au pompage et à l'application par projection, et dont les caractéristiques sont conformes aux exigences de ce devis et à celles contenues dans les documents contractuels.

5.2 Teneur en liant

	Mortier	Béton
Teneur maximale en liant, kg/m³		
Ciment type 10E-SF	475	460
Ciment type 10 avec ajout de fumée de silice	475	460
Ciment type 30 avec ou sans ajout de fumée de silice	490	460

5.3 Entraîneur d'air

Utiliser un entraîneur d'air en poudre dans les mélanges fabriqués en centrale, et un entraîneur d'air liquide dans les mélanges fabriqués en bétonnière mobile.

5.4 Accélérateur de prise

Si l'utilisation d'un accélérateur de prise est autorisé, le doser selon les recommandations du fabricant.

Ne pas utiliser un accélérateur de prise dans un mélange fabriqué en bétonnière mobile.

5.5 Fibres

Lorsque des fibres sont prescrites, utiliser le type et le dosage spécifiés dans les documents contractuels.

5.6 Température

Maintenir la température du béton à la sortie de la lance de projection entre 15 et 25°C, ou entre 10 et 30°C si un accélérateur de prise est utilisé.

6. Caractéristiques du béton durci

6.1 Généralités

Les caractéristiques du béton durci sont vérifiées sur des spécimens de béton prélevées de panneaux de béton projeté confectionnés au chantier par l'Entrepreneur, dans des conditions identiques à celles des travaux, en utilisant le même matériel, le même mélange de béton, la même méthode de travail et les mêmes opérateurs de lance de projection.

Absorption par ébullition et volume des vides perméables Essai réalisé en conformité avec la norme ASTM C642 sur trois carottes de 75 mm de diamètre et de pas moins de 100 mm de long prélevées du même panneau. Le résultat est la moyenne des valeurs obtenues sur les trois carottes.	Absorption par ébullition : max. 8 % à 28 jours. Volume des vides perméables : max. 15 % à 28 jours.
Perméabilité aux ions-chlorure Essai réalisé en conformité avec la norme ASTM C1202 sur la tranche de 50 mm de l'extrémité supérieure d'une carotte de 100 mm de diamètre en mettant la surface supérieure en contact avec la solution de NaCl. Cette surface est meulée afin de la rendre lisse. Si le bord comporte des ébréchures de 12 mm ou moins, il est réparé avec un mortier de haute résistance. Si les ébréchures ont plus de 12 mm, la tranche comportant les ébréchures est rejetée. Le résultat est la moyenne des valeurs obtenues sur les deux carottes prélevées du même panneau.	Béton ou mortier contenant du ciment Portland type 10E-SF ou type 10 avec ajout de fumée de silice, ou type 30 avec ou sans ajout de fumée de silice : max. 1000 coulombs à 28 jours.
Résistance à l'écaillage Essai réalisé à 28 jours en conformité avec la méthode décrite en annexe A de la norme NQ 2621-900, sur deux plaques découpées de deux panneaux du même âge. Le résultat est la moyenne des valeurs obtenues sur les deux plaques.	Masse des débris détachés de la surface exposée à la solution saline après 56 cycles de gel-dégel : max. 1200 g/m^2.

7.1 Généralités

Le mélange peut être fabriqué soit en centrale par dosage pondéral et ensachage des constituants à l'état sec, soit sur le site en bétonnière mobile par dosage volumétrique des constituants.

7. Fabrication et livraison du mélange

7.2 Mélange fabriqué en centrale de dosage et d'ensachage

La centrale doit être accréditée par le Laboratoire et être titulaire d'un certificat de conformité à la norme ISO 9002, en vigueur.

La précision des balances et l'exactitude des dosages des constituants doivent se conformer aux exigences de l'annexe E du document NQ 2621-905. La teneur en eau des granulats au moment de leur ensachage ne doit pas excéder 0,1 % de leur masse sèche. L'entraîneur d'air et l'accélérateur de prise si autorisé par le Directeur, doivent être en poudre. Les mélanges ensachés doivent être homogènes et contenir tous les constituants requis, car aucun ajout subséquent autre que l'eau de projection n'est autorisé au chantier.

GUIDE DE SPÉCIFICATIONS À L'USAGE DU CONCEPTEUR

ANNEXE B

Article	
4.2	Spécifier le type de ciment si autre que Portland type 10E-SF ou Portland type 10 avec ajout de fumée de silice.
4.3.1	Spécifier si le mélange requis est un mélange à béton ou à mortier.
5.5	Si des fibres sont requises, le spécifier et en indiquer la quantité (dosages minimaux recommandés : fibres synthétiques 1 kg/m³; fibres d'acier 40 kg/m³).
6.3	Si une résistance nominale à la compression autre que 35 MPa à 28 jours est requise, indiquer la résistance requise ainsi que les tolérances admises.
7.2	Spécifier s'il y a lieu, la préférence pour la grosseur des sacs (petits ou gros).

RECOMMANDATIONS ADDITIONNELLES

a- Spécifier la méthode d'enlèvement du béton à remplacer et le traitement des surfaces (sciage, piquage, hydrodémolition, scarification, grenaillage). L'hydrodémolition donne le meilleur résultat et la meilleure adhérence au substrat.

b- Spécifier le type d'ancrages pour le treillis ou les barres d'armature, et leur répartition, s'il y a lieu.

c- Spécifier le fini requis et les tolérances de planéité des surfaces du béton projeté.

Quebec
Provincial Specifications

BÉTONS DE CIMENT ET PRODUITS CONNEXES

3.1 Bétons de ciment

Bétons de ciment de masse volumique normale

Autorisé pour publication par :
Sous-ministre adjointe
Direction générale des
infrastructures et des technologies
Anne-Marie Leclerc, ing., M. Ing.

Transports Québec

NORME

Tableau 3101–1
Caractéristiques des bétons de ciment de masse volumique normale pour les ouvrages routiers

Type	Résistance à 28 jours (MPa)	Masse min. liant (kg/m³)	Rapport eau/liant max.	Affaissement[7] (mm)		Gros granulats (mm)	Teneur en air[6] %	$\bar{L}$ max (µm)
				± 20 mm	± 30 mm			
I	30	340[4]	0,45	—	80	5–20	5–8	230
II	30	330[1,2]	0,45	—	80	5–20	5–8	230
IIIA	35[5]	340[3]	0,45	40	—	5–20	5–8	230
IIIB	35[5]	335[3]	0,45	40	—	5–28	5–8	230
IV	35	410[4]	0,40	—	80	5–20	5–8	230
V	35	340[1] 365[2]	0,45	—	80	5–20	5–8	230
VI	35	390[4]	0,40	30	—	5–20	5–8	230
VII	35	340[1] 350[2]	0,45	30	—	5–20	5–8	230
XII	15	220[3]	0,75	—	80	5–20	5–8	—

1. Ciment du type GUb–SF.
2. Ciment ternaire du type GUb–F/SF ou GUb–S/SF. La masse totale des ajouts cimentaires (cendre volante, fumée de silice et laitier) ne doit pas être supérieure à 30 % de la masse totale du liant.
3. Ciment des types GU, MS, MH, HE, GUb–SF, GUb–F/SF, GUb–S/SF.
4. Ciment des types GU, MS, MH, HE. Le ciment Portland du type HE est autorisé seulement si la température extérieure est inférieure à 15 °C.
5. La résistance à la flexion à 28 jours, déterminée au moyen d'une poutre simple chargée au tiers de la portée, doit être d'au moins 4,5 MPa.
6. La teneur en air est toujours la même, qu'il y ait ajout de superplastifiant ou non.
7. Pour les bétons des types I, II, IV et V, l'affaissement maximal est de 150 mm après ajout de superplastifiant.

Notes :

– Avec les ciments ternaires, il peut être nécessaire qu'un superplastifiant soit ajouté à l'usine.

– L'usage des ciments ternaires est interdit du 15 octobre au 31 mars.

Contenu normatif

Tableau 3101–2
Caractéristiques des bétons de ciment de masse volumique normale pour les ouvrages d'art

Type	Résistance à 28 jours (MPa)	Masse min. liant (kg/m³)	Rapport eau/liant max.	Affaissement (mm)		Gros granulats (mm)	Teneur[4] en air %	Étalement (mm) ± 50 mm	$\bar{L}$ max (µm)
				± 30 mm	± 40 mm				
V	35	340[1] 365[2]	0,45	80	—	5–20	5–8	—	230
VIII	50	410[1]	0,37	—	180	5–14	5–8	—	230
IX	60	410[1]	0,35	—	180	5–14	5–8	—	230
XI	30	340[3] 330[2]	0,50	150	—	5–20	4–7	—	—
XIII	50	410[1,2]	0,34 à 0,38	170	—	5–14	5–8	—	230
Autoplaçant	35[7]	460[2]	0,35 à 0,40[6]	—	—	2,5–10 330 l max	6–9	700	230
Autoplaçant en sac[1,2]	35	—	—	—	—	2,5–10	5–9	650	300
Antilessivage	35	450[1]	0,42	—	200	2,5–10[8]	6–9	—	230
Latex 5 %	35	390[1,2]	0,40	120	—	2,5–10	5–8	—	230
Latex 15 %	35	390[3]	0,40	120	—	2,5–10 5–14	5–8	—	300

1. Ciment du type GUb–SF.
2. Ciment ternaire du type GUb–F/SF ou GUb–S/SF. La masse totale des ajouts cimentaires (cendre volante, fumée de silice et laitier) ne doit pas être supérieure à 30 % de la masse totale du liant.
3. Ciment du type GU.
4. La teneur en air est toujours la même, qu'il y ait ajout de superplastifiant ou non.
5. Pour les bétons du type V, l'affaissement maximal est de 150 mm après ajout de superplastifiant.
6. Le rapport volumique sable/(liant+eau+air) doit être compris entre 0,6 et 0,8
7. La résistance à la compression minimale à 48 heures doit être de 10 MPa.
8. Granulat fin entre 45 et 55 %, pourcentage calculé par rapport au granulat total.

Notes :

– Avec les ciments ternaires, il peut être nécessaire qu'un superplastifiant soit ajouté à l'usine.

– L'usage des ciments ternaires est interdit du 15 octobre au 31 mars.

Tableau 3301–1
Caractéristiques du béton projeté par procédé humide

Résistance à 28 jours (MPa)	Masse min. de ciment (kg/m³)	Rapport eau/liant max.	Gros granulats 2,5–10 mm (% masse min.)	Affaissement[2] (mm)	Teneur en air[3] (%)	Masse min. de fibres (kg/m³)
	Ciment composé[1]					
35	410	0,40	25	100 ± 30	10–15	0,9

1. Ciment hydraulique composé du type GUb–SF, GUb–F/SF ou GUb–S/SF.
2. L'affaissement est mesuré après l'ajout de superplastifiant. La tolérance sur la valeur spécifiée d'affaissement ne s'applique qu'aux fins de contrôle.
3. La teneur en air est mesurée à la sortie du camion malaxeur et après l'ajout de superplastifiant, s'il y a lieu.

La mesure est effectuée selon la méthode exposée dans la norme ASTM C 457 « Standard Test Method for Microscopical Determination of Parameters of the Air-Void System in Hardened Concrete », en utilisant un facteur d'amplification qui doit être compris entre 100 et 125.

4.5 Matériel

Le matériel utilisé pour la projection du béton est décrit dans le document ACI 506R « Guide to Shotcrete ». Le matériel doit être d'une capacité suffisante pour assurer une projection uniforme et continue du béton.

4.6 Fiche descriptive du mélange

La fiche descriptive du mélange de béton de ciment doit être datée et signée par le responsable du contrôle de la qualité du fabricant et être présentée avant la fourniture du mélange. Les caractéristiques qui y sont indiquées doivent être représentatives du béton projeté qui sera mis en place et conformes aux exigences de la présente norme.

Cette fiche doit comprendre les informations suivantes :

1- la masse volumique du béton frais à la teneur en air et l'affaissement spécifiés en kg/m³ du mélange;
2- la masse de ciment en kg/m³ du mélange;
3- la quantité d'eau en l/m³ du mélange;
4- la masse des granulats fins et des gros granulats en kg/m³ du mélange (état saturé, surface sèche);
5- le rapport massique eau/liant, en considérant que les granulats sont dans un état saturé, surface sèche;
6- la résistance à la compression et l'affaissement du mélange;
7- le type d'adjuvant, les noms du produit et du fournisseur et les quantités proposées;
8- le type de ciment, sa provenance et le nom de la cimenterie;
9- un rapport d'un laboratoire enregistré établissant pour le mélange fourni les caractéristiques du réseau de bulles d'air entraîné, soit la teneur en air, le facteur d'espacement des bulles d'air et la surface volumique;
10- les caractéristiques intrinsèques, de fabrication et complémentaires des granulats fins et des gros granulats ainsi que leur provenance;
11- la granulométrie, la masse volumique pilonnée à sec, la densité relative brute (état saturé, surface sèche), le pourcentage d'absorption des granulats fins et des gros granulats ainsi que le module de finesse et l'indice colorimétrique du granulat fin;

Tableau 3201–1
Caractéristiques du béton projeté par procédé à sec

Résistance à 28 jours (MPa)	Masse min. de ciment (kg/m³)		Rapport eau/liant max.	Gros granulats 2,5–10 mm (% masse min.)	Teneur en air (%)	Masse min. de fibres (kg/m³)
	Ciment composé[1]	Type HE[2]				
35	450	460	0,40	10	3,5–7	0,9

1. Ciment hydraulique composé du type GUb–SF, GUb–F/SF ou GUb–S/SF.
2. Utilisation au plafond seulement.

4.4 Réseau de bulles d'air

Le béton projeté doit posséder un facteur d'espacement des bulles d'air inférieur ou égal à 300 µm en moyenne, aucun résultat ne devant être supérieur à 320 µm.

La mesure est effectuée selon la méthode exposée dans la norme ASTM C 457 « Standard Test Method for Microscopical Determination of Parameters of the Air-Void System in Hardened Concrete », en utilisant un facteur d'amplification qui doit être compris entre 100 et 125. Ces caractéristiques sont évaluées à partir d'un panneau de béton projeté.

4.5 Matériel

Le matériel utilisé pour la projection du béton est décrit dans le document ACI 506R « Guide to Shotcrete ». Le matériel doit être d'une capacité suffisante pour assurer une projection uniforme et continue du béton.

Malaxeur :

Le malaxeur servant à la préhumidification des mélanges doit produire un mélange uniforme, dont la teneur en eau est conforme à celle qui est exigée.

Pompe :

La pompe consiste essentiellement en un réservoir dans lequel le mélange venant du malaxeur est déversé. Une pression d'air est établie à l'intérieur du réservoir à l'aide d'une soupape ou d'un engrenage, et le boyau et la lance de projection sont alimentés de façon continue.

Boyau :

Les boyaux, d'un diamètre de 38,1 mm, doivent être flexibles, munis de joints étanches pour relier plusieurs sections entre elles et pouvant supporter la pression nécessaire. Ils doivent s'adapter parfaitement à la pompe et à la lance de projection.

Lance de projection :

La lance de projection doit comporter un embranchement avec soupape ajustable pour raccorder le boyau d'alimentation d'eau. À son arrivée dans la lance, l'eau traverse un anneau perforé qui assure un mélange uniformément hydraté à la sortie de la lance de projection. La garniture intérieure de cette lance de projection doit être renouvelée au besoin. Un anneau de prémouillage doit être localisé à 3 m de l'extrémité de la lance de projection.

Compresseur :

Le compresseur doit fournir la quantité d'air suffisante à la pression nécessaire, et cette dernière ne doit pas fluctuer. L'air qui arrive à la lance de projection doit être exempt d'huile. La pression d'opération, mesurée au moyen d'un manomètre, ne doit pas être inférieure à 275 kPa dans les cas où 30 m ou moins de boyau sont utilisés; cette pres-sion doit être augmentée de 35 kPa pour chaque longueur supplémentaire de 15 m de boyau, et de 35 kPa pour chaque dénivelée ascendante supplémentaire de 8 m entre le compresseur et la lance de projection.

Hydro Quebec Specifications

Hydro Québec
Équipement

Spécification technique normalisée

Béton : Constituants et exécution des travaux sur les ouvrages hydroélectriques

SN-26-1.2000 RÉVISION

NOVEMBRE 2006

© Hydro-Québec Équipement
Tous droits réservés. Aucune partie de cette publication ne peut être reproduite ni utilisée sous quelque forme que ce soit et par aucun procédé, électronique, mécanique, y compris la photocopie et les microfilms, sans l'accord écrit d'Hydro-Québec Équipement.

f) les limites d'affaissement ;

g) les adjuvants utilisés;

h) le numéro de la formule de dosage.

4.2 Matériaux

4.2.1 Ciments et ajouts cimentaires

L'article 4.2.1 de la norme CSA A23.1-04 ne s'applique pas.

4.2.1.1 Type de ciment

Dans le cadre des aménagements hydro-électriques comportant du béton de masse, le ciment Portland type LH-HQ (20M) doit être utilisé et être conforme au devis technique normalisé «Ciment Portland type LH HQ (20M) - Fourniture SN-26.2-2000 RÉVISION MAI 2005 », à moins d'indication contraire dans le devis technique.

La désignation du ciment a été changée afin de se conformer à la norme CSA A3001-03 « Liants utilisés dans le béton ». Le ciment de type 20M devient le ciment de type LH HQ (20M). LH signifie Low heat, HQ signifie Hydro-Québec et 20M entre parenthèses est l'ancienne appellation.

Lorsque d'autres types de ciment sont spécifiés, ils doivent être conformes aux normes CSA A23.1-04 et CAN/CSA A3001-03

4.2.1.2 Ordre d'utilisation

L'Entrepreneur doit utiliser le ciment dans l'ordre dans lequel il est livré.

4.2.1.3 Échantillonnage et fréquence d'essais

Les caractéristiques chimiques, physiques et mécaniques du ciment portland type LH-H Q (20M) doivent être vérifiées à la réception au chantier, selon les fréquences établies au devis technique normalisé SN-26.2-2000 RÉVISION MAI 2005 « Ciment Portland type LH-HQ (20M) – Fourniture ». Pour les autres types de ciment et ajouts cimentaires pouvant être spécifiés par Hydro-Québec, les exigences de la norme CAN/CSA A3000-03 s'appliquent.

4.2.2 Eau

L'article 4.2.2 de la norme CSA A23.1-04 incluant les notes s'appliquent avec les exigences qui suivent.

Si l'eau ne provient pas de l'aqueduc d'une municipalité, une analyse chimique de l'eau est requise au début des travaux afin d'accepter la source d'alimentation selon les exigences du tableau 3. Dans ce cas, l'échantillonnage de l'eau doit être effectué à la source. La procédure d'échantillonnage ainsi que le temps limite dans lequel l'eau peut être utilisée afin de réaliser les essais doivent être conformes aux procédures du Ministère de l'Environnement du Québec (MENVIQ).